NOTE:

CONTACT VEEM IF GYRO UNIT INTENDED TO BE LOCATED MORE THAN 2m ABOVE DWL OR MORE THEN 70% OF LWL FORWARD OF TRANSOM.

GYRO UNIT MAY BE INSTALLED WITH FRONT PANEL FACING FORWARD OR AFT. FRONT PANEL MUST NOT BE ALIGNED ATHWARTSHIPS.

REFER TO SHEET 5 FOR STRUCTURAL LOADS

WARNING !

GYRO-INDUCED LOADS ARE VERY LARGE. FULL STRUCTURAL ANALYSIS IS REQUIRED TO PROVIDE SUFFICIENT SUPPORT.

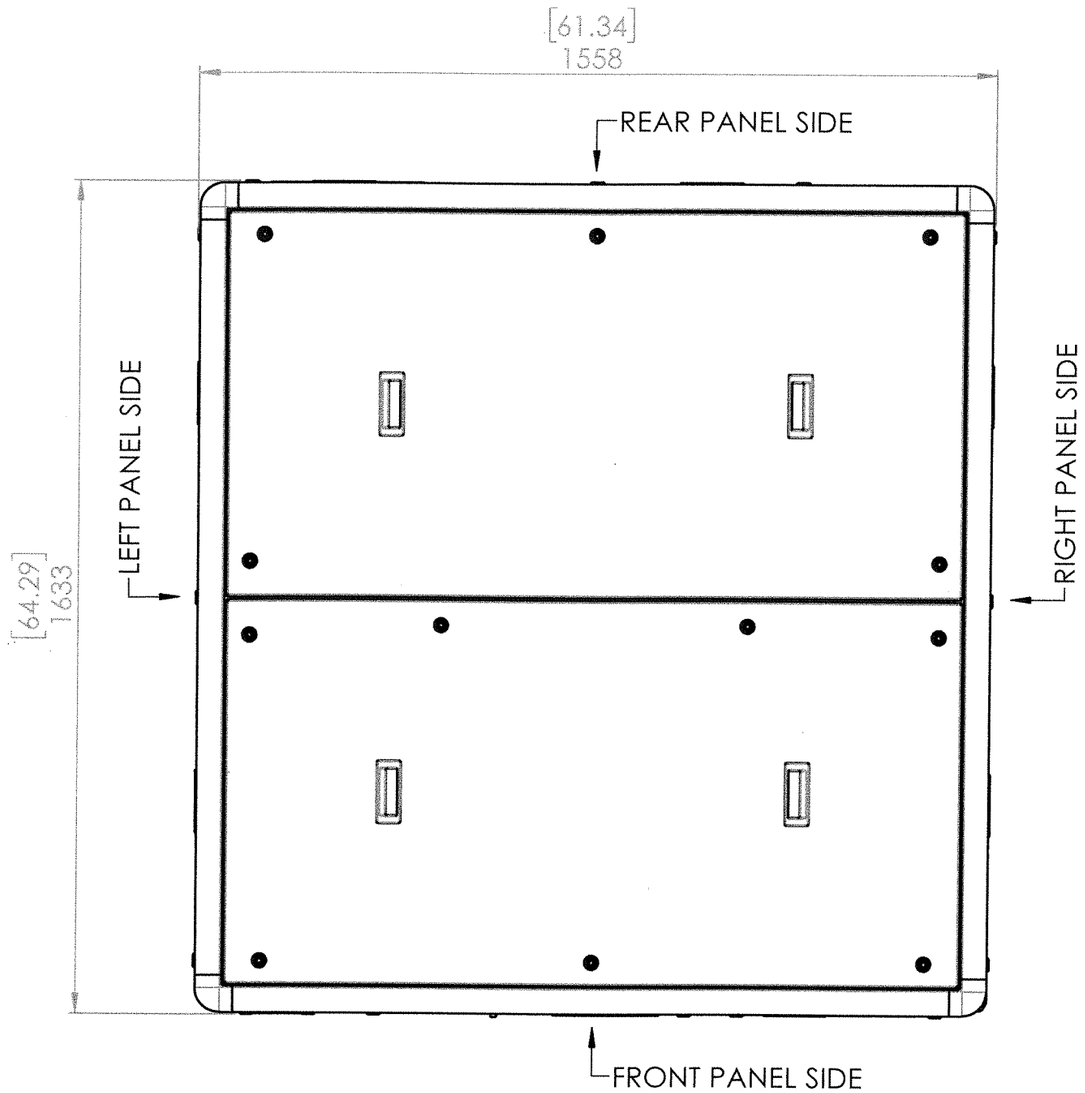

TOP VIEW

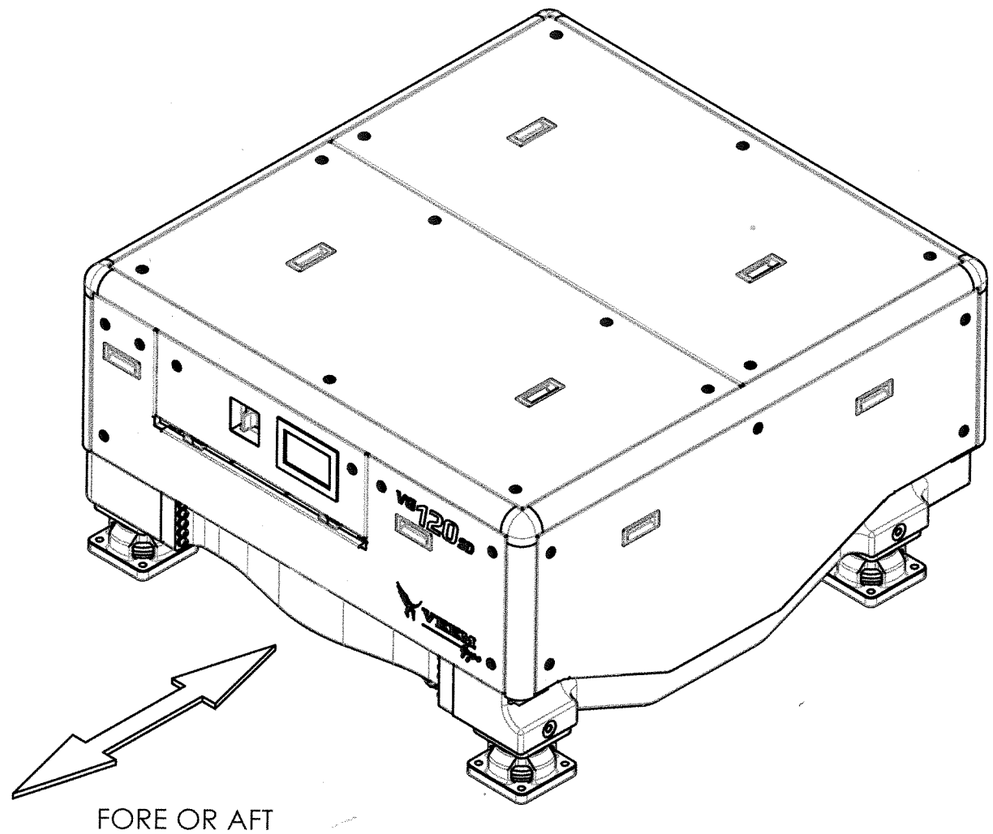

ISOMETRIC VIEW

REV.	DESCRIPTION	DRN	INITL	DATE	ENG CHK	INITL	DATE	MAN APP	INITL	DATE	CAST APP	INITL	DATE	MACH APP	INITL	DATE
9	TABLES UPDATED	MT	MT	6/7/2018	MA		9/7/18	PS		19/7/18				DJ		19/07/18

REVISIONS

VEEM Gyro

COPYRIGHT 2018 - ALL RIGHTS RESERVED BY VEEM LTD. THIS DRAWING HAS BEEN PRODUCED BY VEEM LTD. NO PART MAY BE COPIED, MODIFIED OR REPRODUCED IN ANY MANNER WITHOUT PRIOR WRITTEN APPROVAL OF VEEM LTD - www.veem.com.au

VEEM ENGINEERING GROUP
22 BAILE RD
CANNING VALE, WA 6155
TEL: +61 8 9455 9355
FAX: +61 8 9455 9333
email: veem@veem.com.au

DRAFTING TO AS 1100.101 AND 1100.201

TOLERANCES IN ACCORDANCE WITH -

VEEM GYRO 120 SD

PART/ASSEMBLY No: 0400-AM-1000-4

MASS: 2755kg

DESCRIPTION: VEEM GYRO 120 INSTALLATION DRAWING

DRG No: 0400-DT-1000.01

REV: 9

ALL DIMENSIONS IN: mm
DIMENSIONS IN BRACKETS: [Inches]

SHEET: 01 OF 10

SCALE: 1:12

SHEET SIZE: A3

NOTE:

CONTACT VEEM IF GYRO UNIT INTENDED TO BE LOCATED MORE THAN 2m ABOVE DWL OR MORE THEN 70% OF LWL FORWARD OF TRANSOM.

GYRO UNIT MAY BE INSTALLED WITH FRONT PANEL FACING FORWARD OR AFT. FRONT PANEL MUST NOT BE ALIGNED ATHWARTSHIPS.

REFER TO SHEET 5 FOR STRUCTURAL LOADS

WARNING !

GYRO-INDUCED LOADS ARE VERY LARGE. FULL STRUCTURAL ANALYSIS IS REQUIRED TO PROVIDE SUFFICIENT SUPPORT.

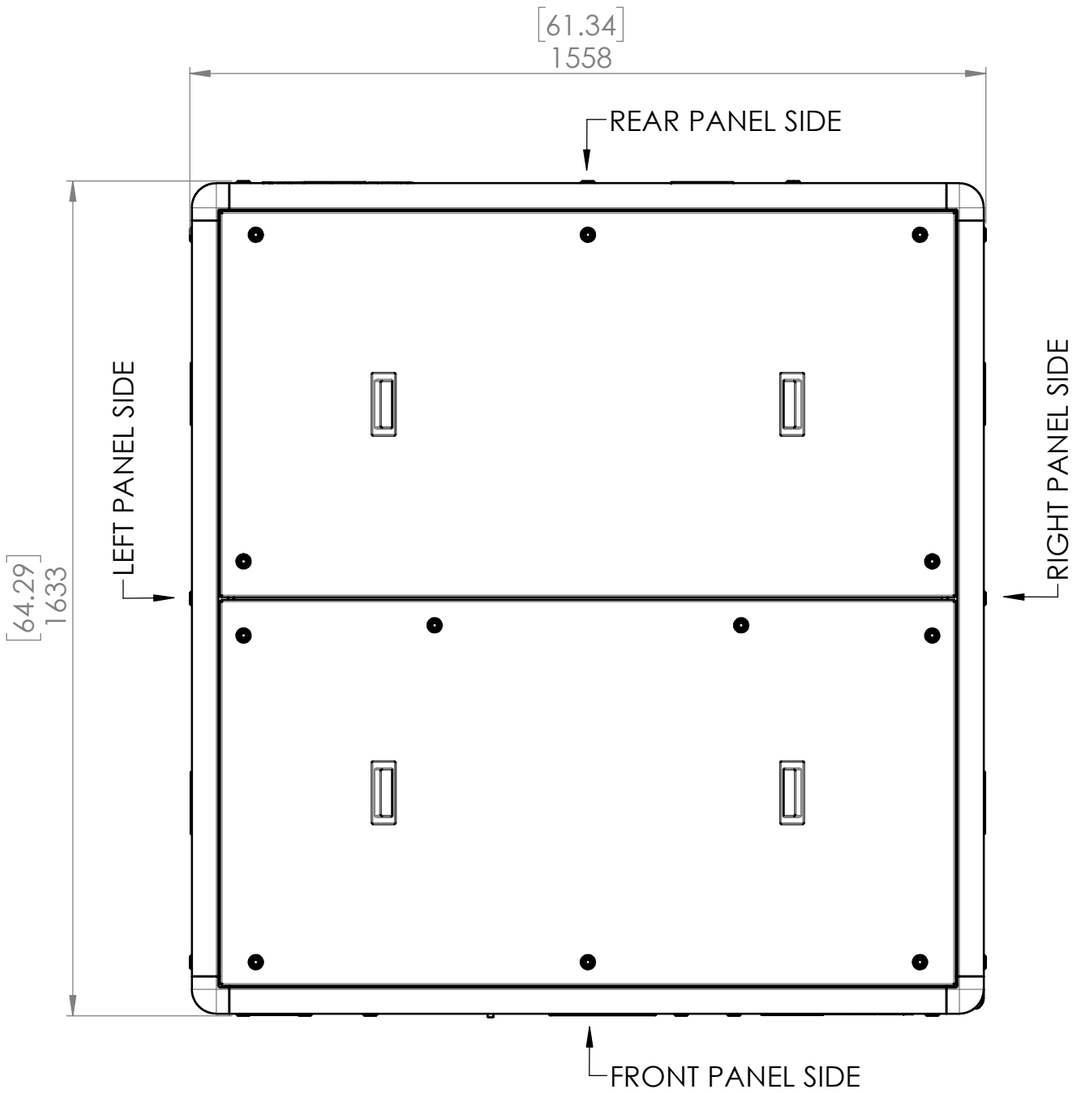

TOP VIEW

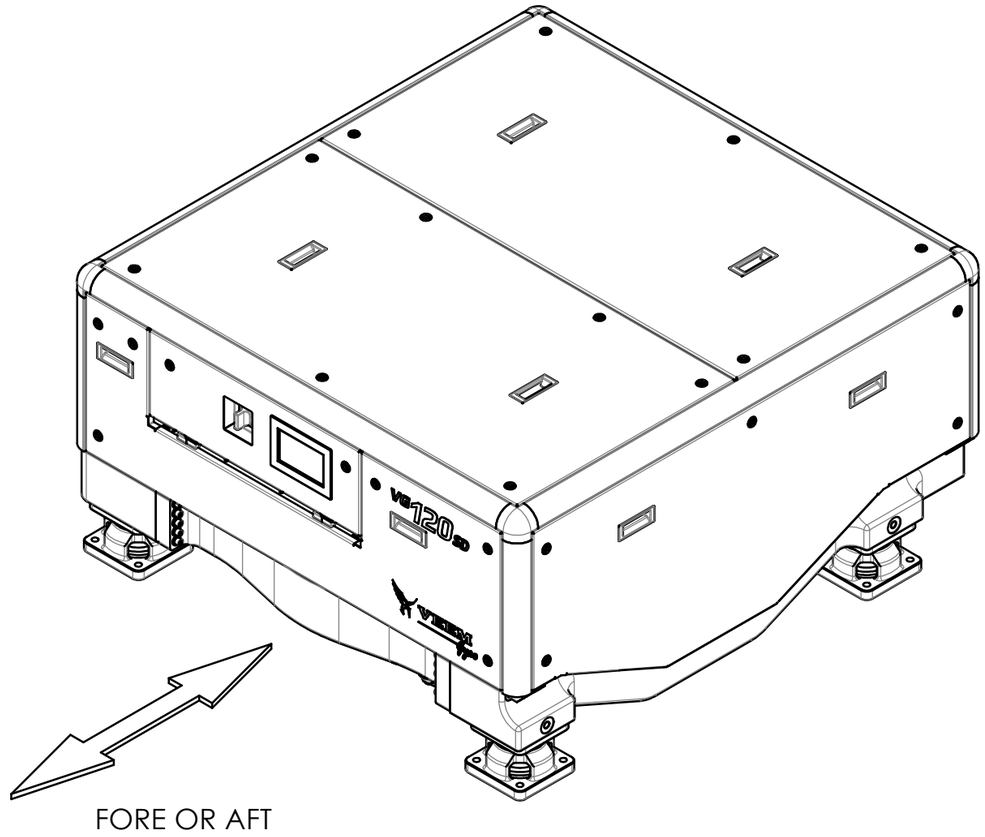

FORE OR AFT

ISOMETRIC VIEW

9	TABLES UPDATED	MT			MA			PS								
REV.	DESCRIPTION	DRN	INITL	DATE	ENG CHK	INITL	DATE	MAN APP	INITL	DATE	CAST APP	INITL	DATE	MACH APP	INITL	DATE
REVISIONS																

VEEM Gyro

COPYRIGHT 2018 - ALL RIGHTS RESERVED BY VEEM LTD. THIS DRAWING HAS BEEN PRODUCED BY VEEM LTD. NO PART MAY BE COPIED, MODIFIED OR REPRODUCED IN ANY MANNER WITHOUT PRIOR WRITTEN APPROVAL OF VEEM LTD - www.veem.com.au

VEEM ENGINEERING GROUP
22 BAILE RD
CANNING VALE, WA 6155
TEL: +61 8 9455 9355
FAX: +61 8 9455 9333
email: veem@veem.com.au

DRAFTING TO AS 1100.101 AND 1100.201

TOLERANCES IN ACCORDANCE WITH -

VEEM GYRO 120 SD

PART/ASSEMBLY No: 0400-AM-1000-4

MASS: 2755kg

DESCRIPTION: VEEM GYRO 120 INSTALLATION DRAWING

DRG No: 0400-DT-1000.01

REV: 9

ALL DIMENSIONS IN: mm
DIMENSIONS IN BRACKETS: [Inches]

SHEET: 01 OF 10

SCALE: 1:12

SHEET SIZE: A3

NOTE:
4 x M16 RUD VLBG SWIVEL LIFTING POINT OR EQUIVALENT TO BE USED FOR LIFTING.
SWIVEL BASE ∅40mm MAX, MIN WLL 2.0t EACH RECOMMENDED.
MAXIMUM SLING ANGLE 60˚. SPREADER BAR 2200 mm LONG TO BE USED.
ENSURE RIGGING DOES NOT CONTACT GYRO ENCLOSURE OR DAMAGE MAY RESULT.

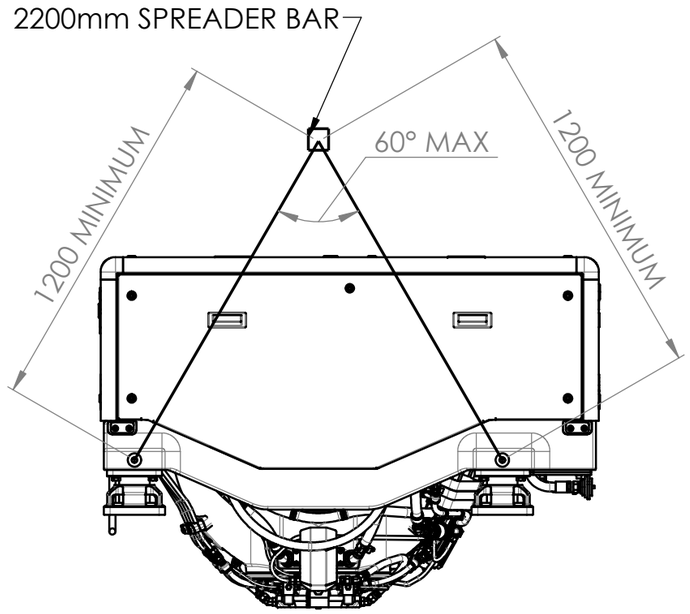

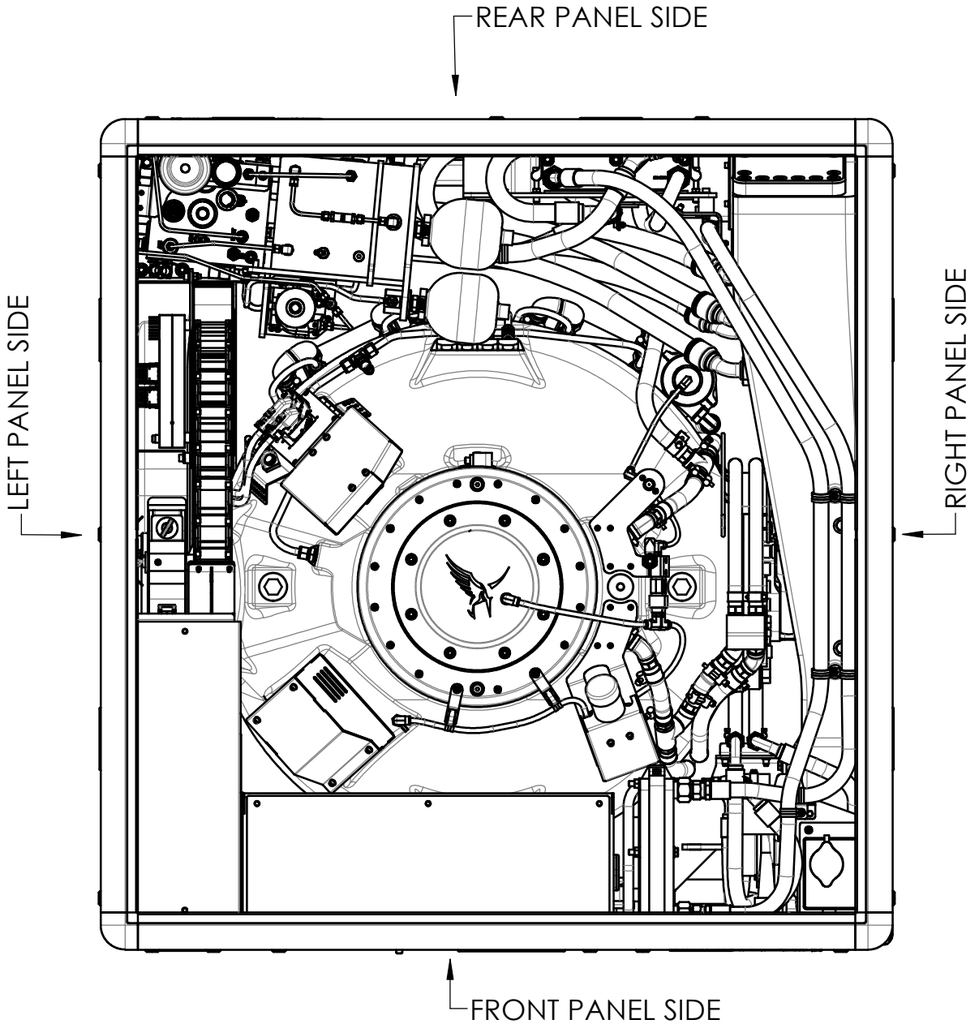

TOP VIEW
WITH PANELS REMOVED

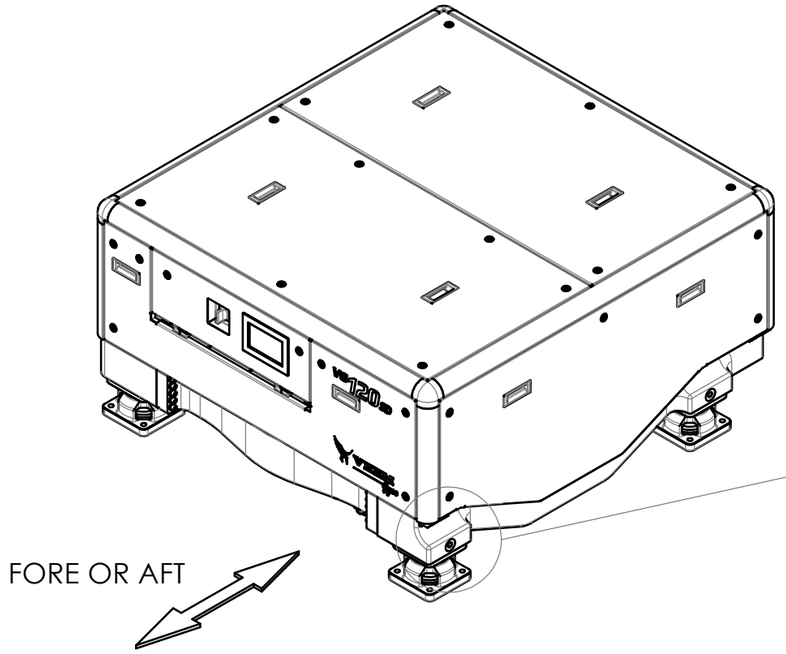

ISOMETRIC VIEW

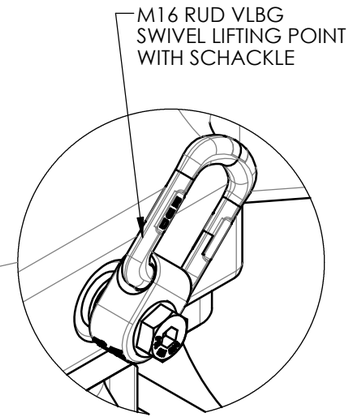

DETAIL VIEW

VEEM GYRO 120 SD		
PART/ASSEMBLY No 0400-AM-1000-4	MASS 2755kg	
DRAFTING TO AS 1100.101 AND 1100.201	DESCRIPTION INSTALLATION DRAWING	
TOLERANCES IN ACCORDANCE WITH -	DRG No 0400-DT-1000.02	REV 9
	ALL DIMENSIONS IN: mm DIMENSIONS IN BRACKETS: [Inches]	
	SHEET 02 OF 10 / SCALE 1:12	SHEET SIZE A3

COPYRIGHT 2018 - ALL RIGHTS RESERVED BY VEEM LTD. THIS DRAWING HAS BEEN PRODUCED BY VEEM LTD. NO PART MAY BE COPIED, MODIFIED OR REPRODUCED IN ANY MANNER WITHOUT PRIOR WRITTEN APPROVAL OF VEEM LTD - www.veem.com.au

VEEM ENGINEERING GROUP
22 BAILE RD
CANNING VALE, WA 6155
TEL: +61 8 9455 9355
FAX: +61 8 9455 9333
email: veem@veem.com.au

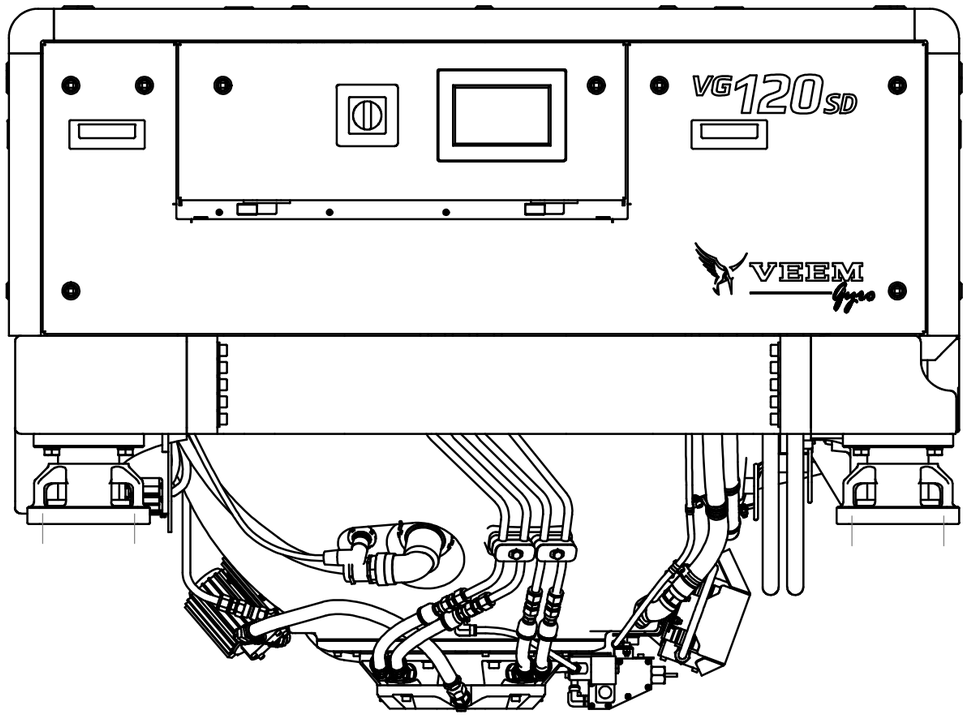

FRONT PANEL VIEW

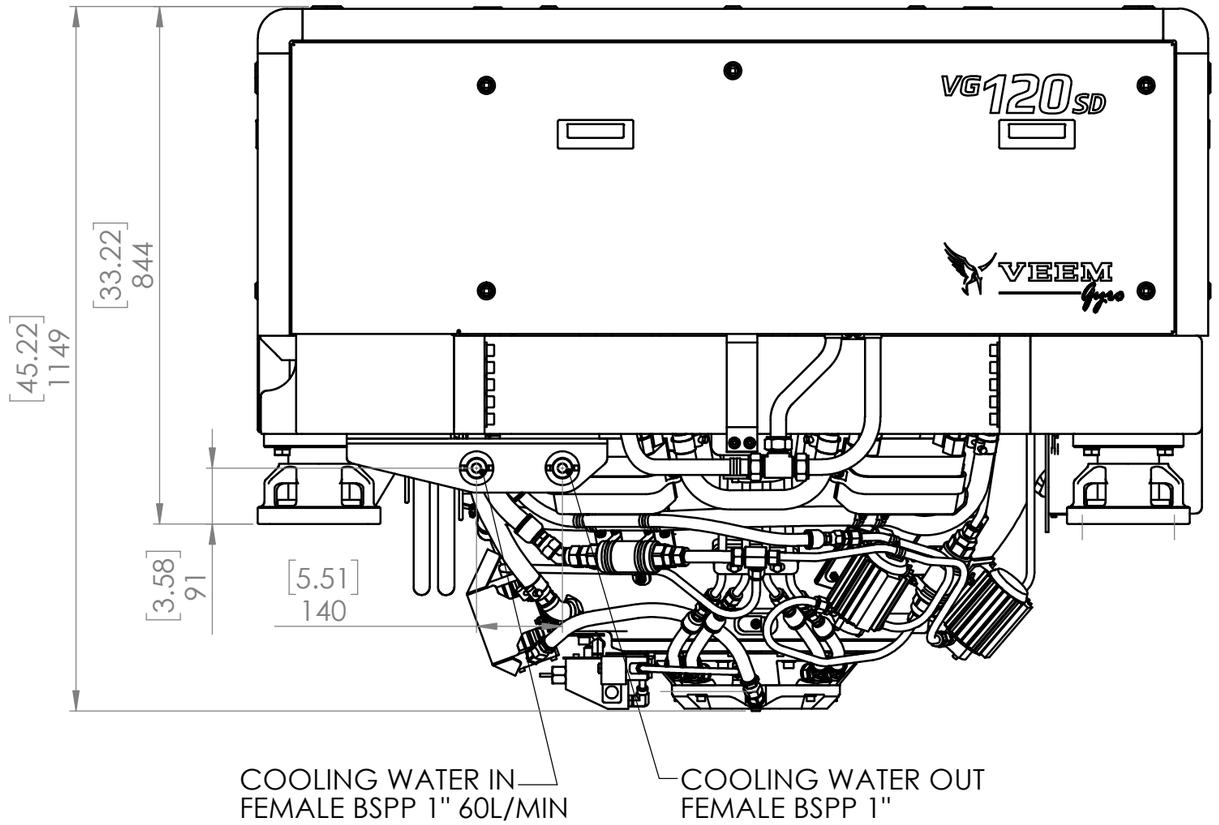

REAR PANEL VIEW

POWER SUPPLY
AC: 380/480V, 50/60Hz, 3∅
DC: 24V, 23A

ELECTRICAL & DATA CABLES TERMINATED
THROUGH GLANDS IN CABINET
SEE DRAWING 0400-DT-1003

POWER: 16ekW			
VOLTAGE:	380V	415V	480V
CURRENT:	28Arms	25Arms	22Arms

NOTE:

COOLING WATER TO BE FRESH WATER WITH CORROSION INHIBITORS, OR RAW SEAWATER. #16-20 MESH FILTER RECOMMENDED FOR RAW SEAWATER.

HEAT REJECTION TO AMBIENT
IS 1200W IN 20 C COMPARTMENT.
AIR HANDLING MAY BE REQUIRED

COOLING WATER TEMP (DEG C)	REQ FLOW * (LT/MIN)	COOLING WATER EXIT TEMP * (DEG C)
<22	30	43
22 - 27	40	43
27 - 32	50	45
32 - 35	60	47
** PRESSURE DROP OF 1.0bar @ 60lpm		
* UNDER MAX LOADING CONDITIONS AND AT 55°C AMBIENT AIR		

VEEM Gyro

COPYRIGHT 2018 - ALL RIGHTS RESERVED BY VEEM LTD. THIS DRAWING HAS BEEN PRODUCED BY VEEM LTD. NO PART MAY BE COPIED, MODIFIED OR REPRODUCED IN ANY MANNER WITHOUT PRIOR WRITTEN APPROVAL OF VEEM LTD - www.veem.com.au

VEEM ENGINEERING GROUP
22 BAILE RD
CANNING VALE, WA 6155
TEL: +61 8 9455 9355
FAX: +61 8 9455 9333
email: veem@veem.com.au

DRAFTING TO AS 1100.101 AND 1100.201

TOLERANCES IN ACCORDANCE WITH -

VEEM GYRO 120 SD

PART/ASSEMBLY No	MASS
0400-AM-1000-4	2755kg

DESCRIPTION: EXTERNAL CONNECTIONS

DRG No: 0400-DT-1000.03 REV: 9

ALL DIMENSIONS IN: mm
DIMENSIONS IN BRACKETS: [Inches]

SHEET: 03 OF 10 | SCALE: 1:10 | SHEET SIZE: A3

NOTE:

THIS MODEL REPRESENTS THE ACTUAL SIZE ENVELOPE OF THE GYRO STABILISER.
A MINIMUM CLEARANCE OF 40mm ON THE HATCHED AREA IS REQUIRED FOR SAFE OPERATION.
MOUNTING SURFACES AT FOUR LOCATIONS TO BE LEVEL WITHIN 1mm ACROSS EACH MOUNT AND WITHIN 3mm ACROSS THE WHOLE FOOTPRINT.

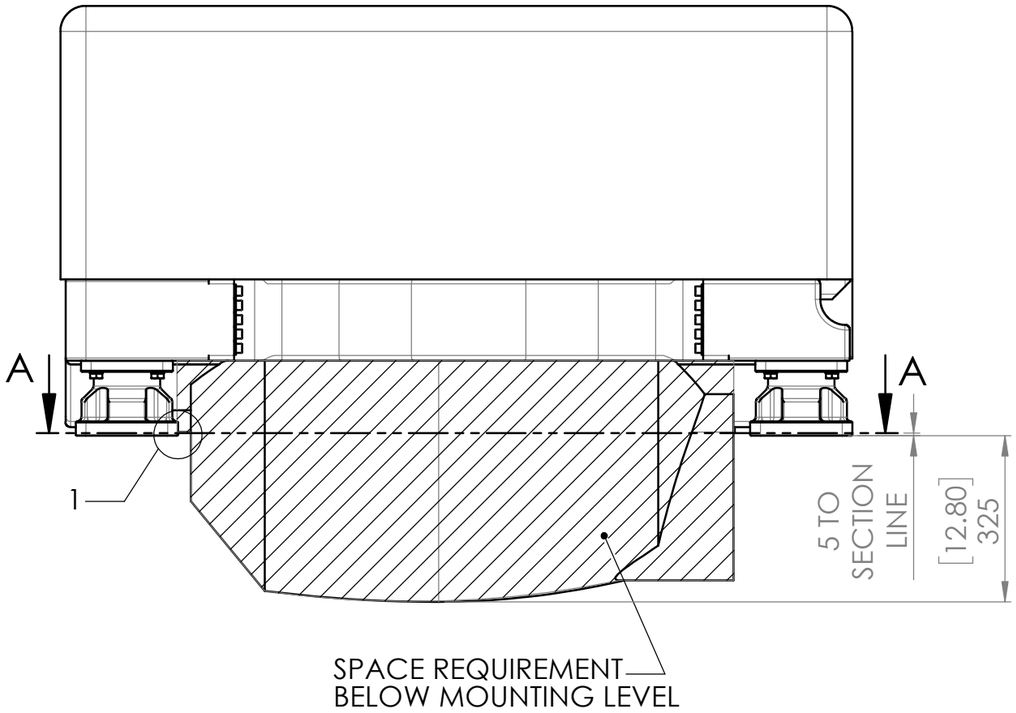

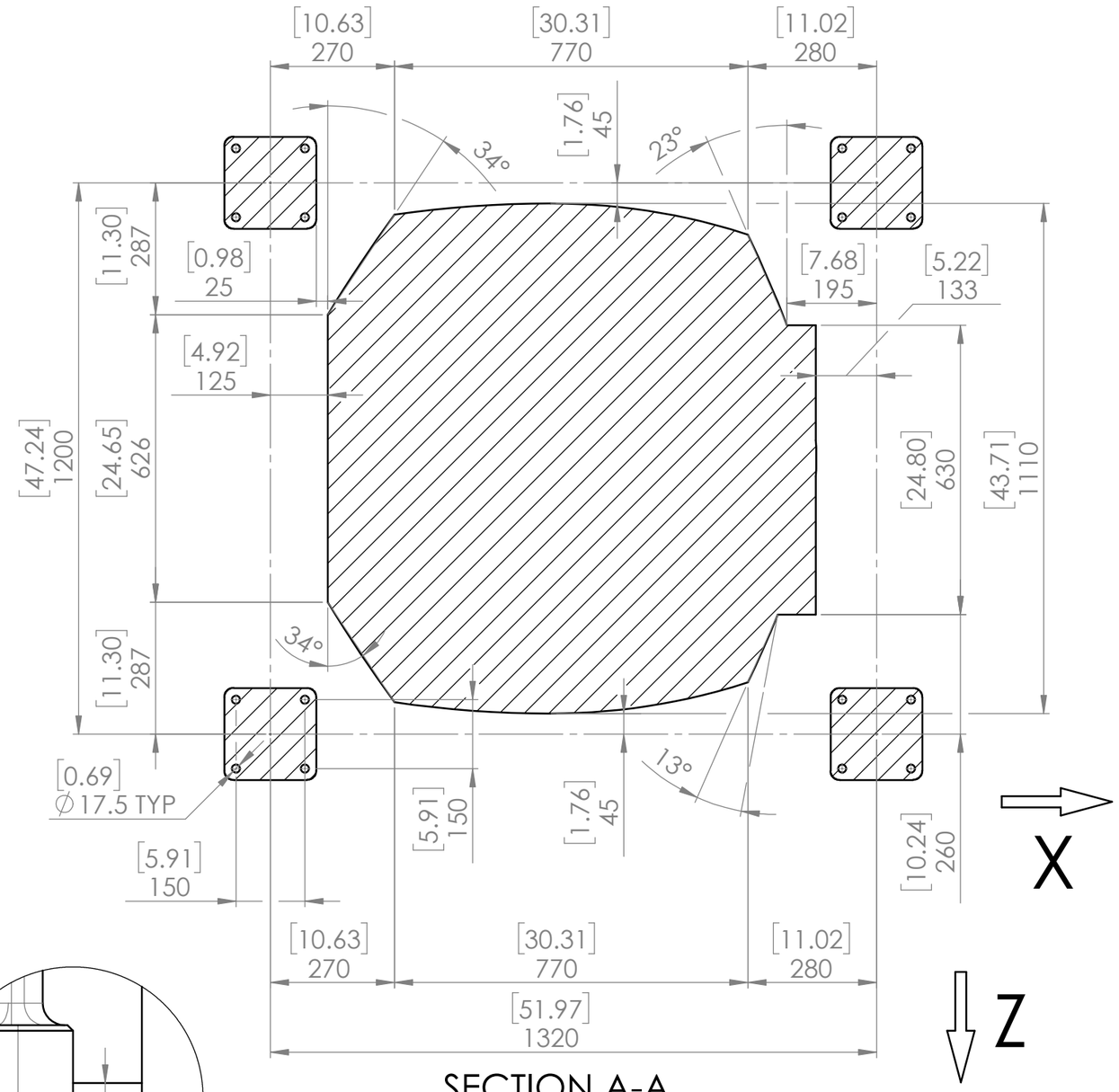

SECTION A-A
VIEW FROM ABOVE
REFER TO 0400-DM-4667
FOR MOUNTING HOLE TEMPLATE

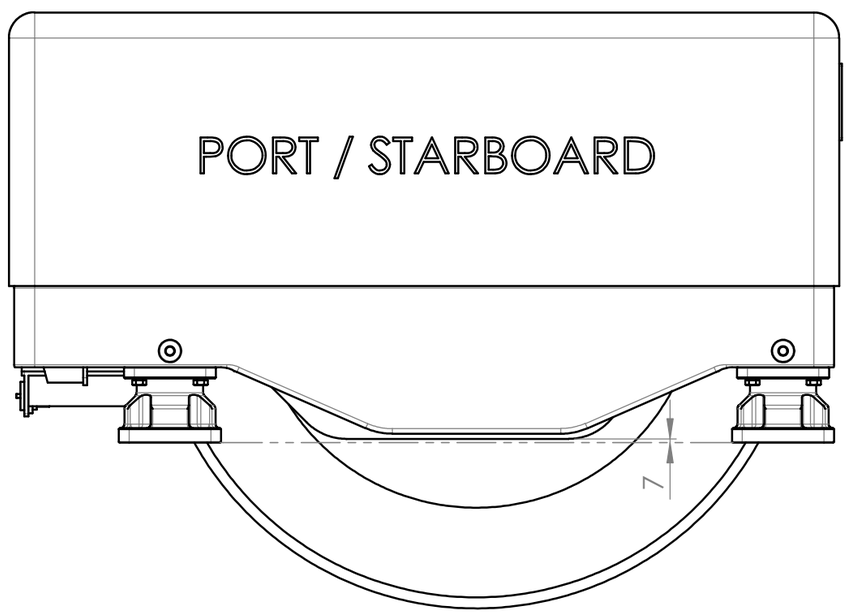

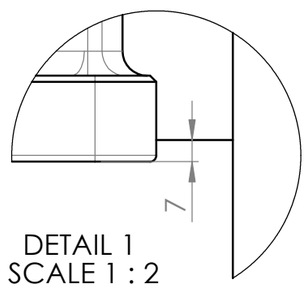

DETAIL 1
SCALE 1 : 2

ALL DIMENSIONS IN: mm
DIMENSIONS IN BRACKETS: [Inches]

VEEM Gyro

COPYRIGHT 2018 - ALL RIGHTS RESERVED BY VEEM LTD. THIS DRAWING HAS BEEN PRODUCED BY VEEM LTD. NO PART MAY BE COPIED, MODIFIED OR REPRODUCED IN ANY MANNER WITHOUT PRIOR WRITTEN APPROVAL OF VEEM LTD - www.veem.com.au

VEEM ENGINEERING GROUP
22 BAILE RD
CANNING VALE, WA 6155
TEL: +61 8 9455 9355
FAX: +61 8 9455 9333
email: veem@veem.com.au

DRAFTING TO AS 1100.101 AND 1100.201

TOLERANCES IN ACCORDANCE WITH -

VEEM GYRO 120 SD			
PART/ASSEMBLY No: 0400-AM-1000		MASS: 2755kg	
DESCRIPTION: SPACE REQUIREMENTS UNDER STABILISER			
DRG No: 0400-DT-1000.04			REV: 9
MATERIAL		PROCESS	
SHEET: 04 OF 10	SCALE: 1:12		SHEET SIZE: A3

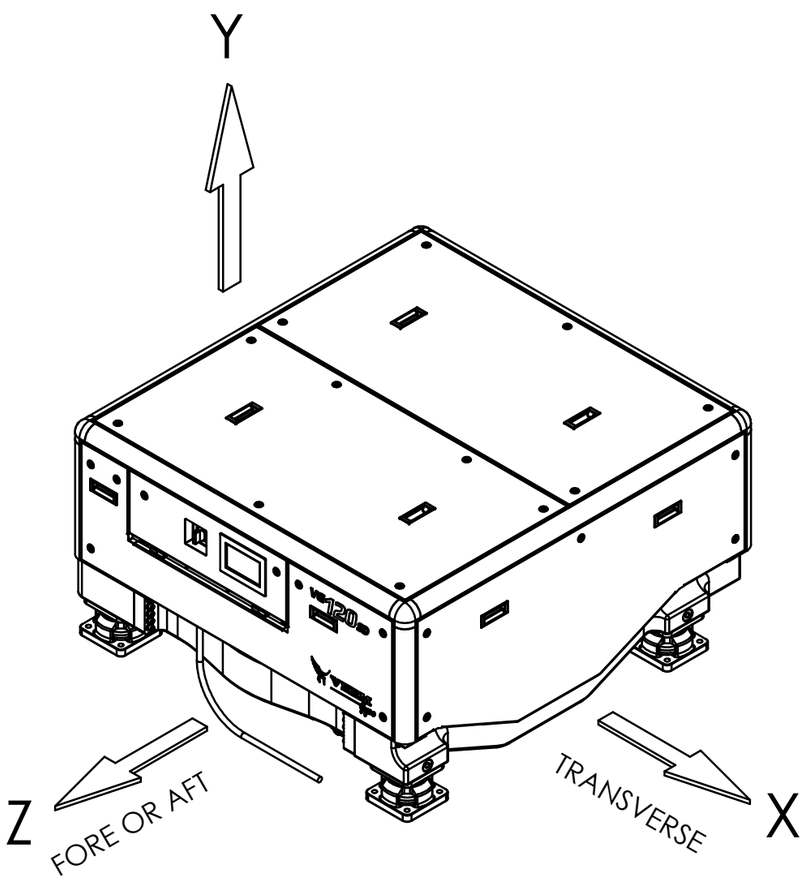

ISOMETRIC VIEW

FORCES ON MOUNT		
	MAX	MIN
X	17.1kN	-17.1kN
Y	70.0kN	-83.5kN
Z	18.0kN	-18.0kN

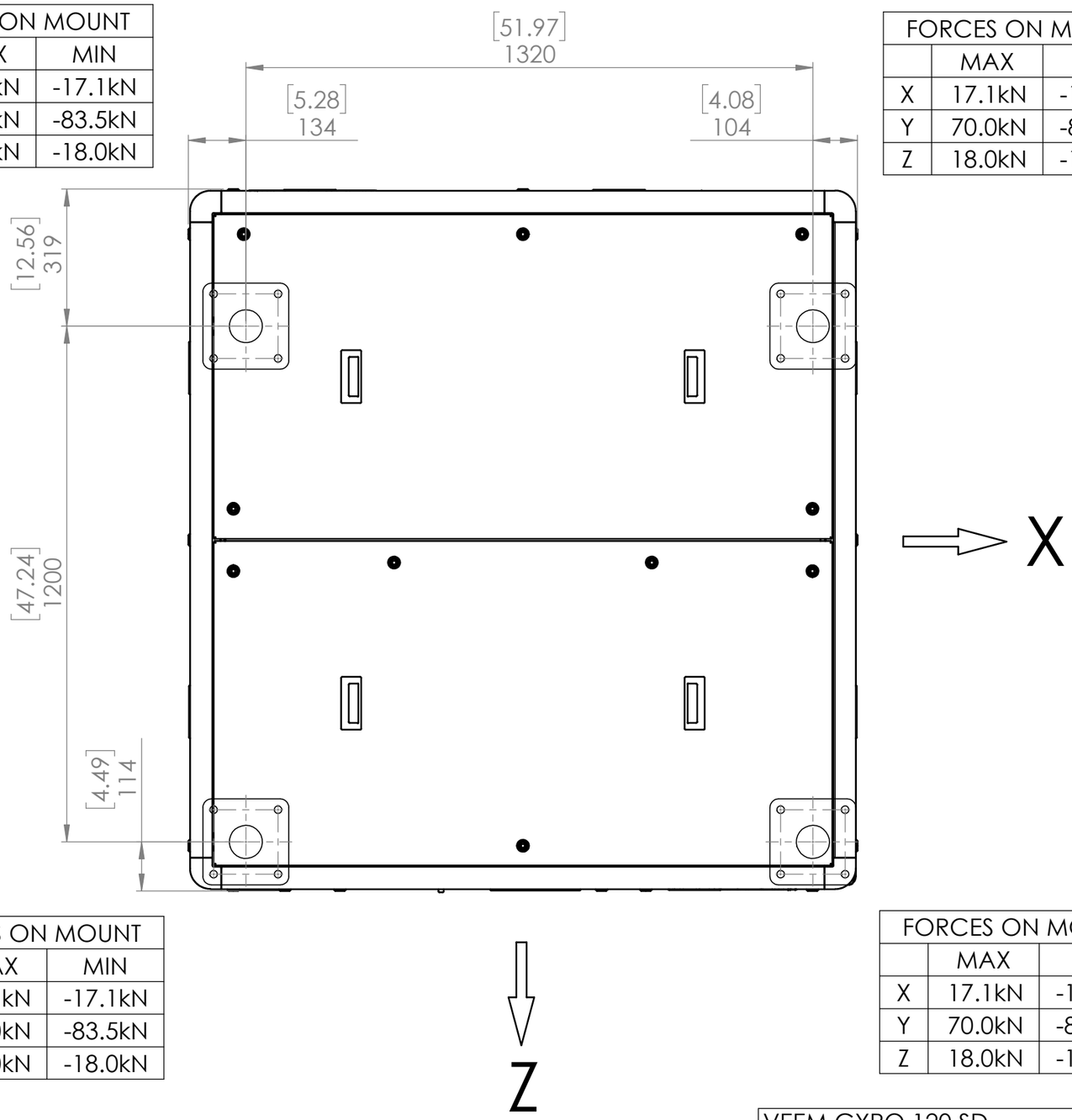

FORCES ON MOUNT		
	MAX	MIN
X	17.1kN	-17.1kN
Y	70.0kN	-83.5kN
Z	18.0kN	-18.0kN

FORCES ON MOUNT		
	MAX	MIN
X	17.1kN	-17.1kN
Y	70.0kN	-83.5kN
Z	18.0kN	-18.0kN

FORCES ON MOUNT		
	MAX	MIN
X	17.1kN	-17.1kN
Y	70.0kN	-83.5kN
Z	18.0kN	-18.0kN

WARNING !

GYRO-INDUCED LOADS ARE VERY LARGE.
FULL STRUCTURAL ANALYSIS IS REQUIRED
TO PROVIDE SUFFICIENT SUPPORT.

NOTE:

FY (VERTICAL) LOADS SHALL BE CONSIDERED TO FULLY REVERSE AT THE VESSELS NATURAL ROLLING PERIOD.
FX AND FZ (HORIZONTAL) LOADS SHALL BE CONSIDERED TO FULLY REVERSE AT HALF THE VESSELS NATURAL ROLLING PERIOD.
EACH LOAD SHALL BE CONSIDERED TO BE INDEPENDENT. ONEROUS LOAD COMBINATIONS SHALL BE CONSIDERED.
TO BE READ IN CONJUNCTION WITH TECHNICAL NOTE 1404.

VEEM Gyro

COPYRIGHT 2018 - ALL RIGHTS RESERVED BY VEEM LTD. THIS DRAWING HAS BEEN PRODUCED BY VEEM LTD. NO PART MAY BE COPIED, MODIFIED OR REPRODUCED IN ANY MANNER WITHOUT PRIOR WRITTEN APPROVAL OF VEEM LTD - www.veem.com.au

VEEM ENGINEERING GROUP
22 BAILE RD
CANNING VALE, WA 6155
TEL: +61 8 9455 9355
FAX: +61 8 9455 9333
email: veem@veem.com.au

DRAFTING TO AS 1100.101 AND 1100.201

TOLERANCES IN ACCORDANCE WITH -

VEEM GYRO 120 SD

PART/ASSEMBLY No: 0400-AM-1000

MASS: 2755kg

DESCRIPTION: FORCES ON MOUNTS

DRG No: 0400-DT-1000.05

REV: 9

ALL DIMENSIONS IN: mm
DIMENSIONS IN BRACKETS: [Inches]

SHEET: 05 OF 10

SCALE: 1:12

SHEET SIZE: A3

NOTE:

MIN PRE-LOAD 65kN±10% ON MOUNT BOLTS, M16 GRADE 8.8, SS A4-80 OR EQUIVALENT RECOMMENDED.
TRAINED TECHNICIAN WITH MEANS TO MEASURE PRE-LOAD ACHIEVED WIITHIN ±10% REQUIRED.
IF CARBON STEEL FASTENERS USED, PROTECTIVE COATING REQUIRED TO PREVENT CORROSION.

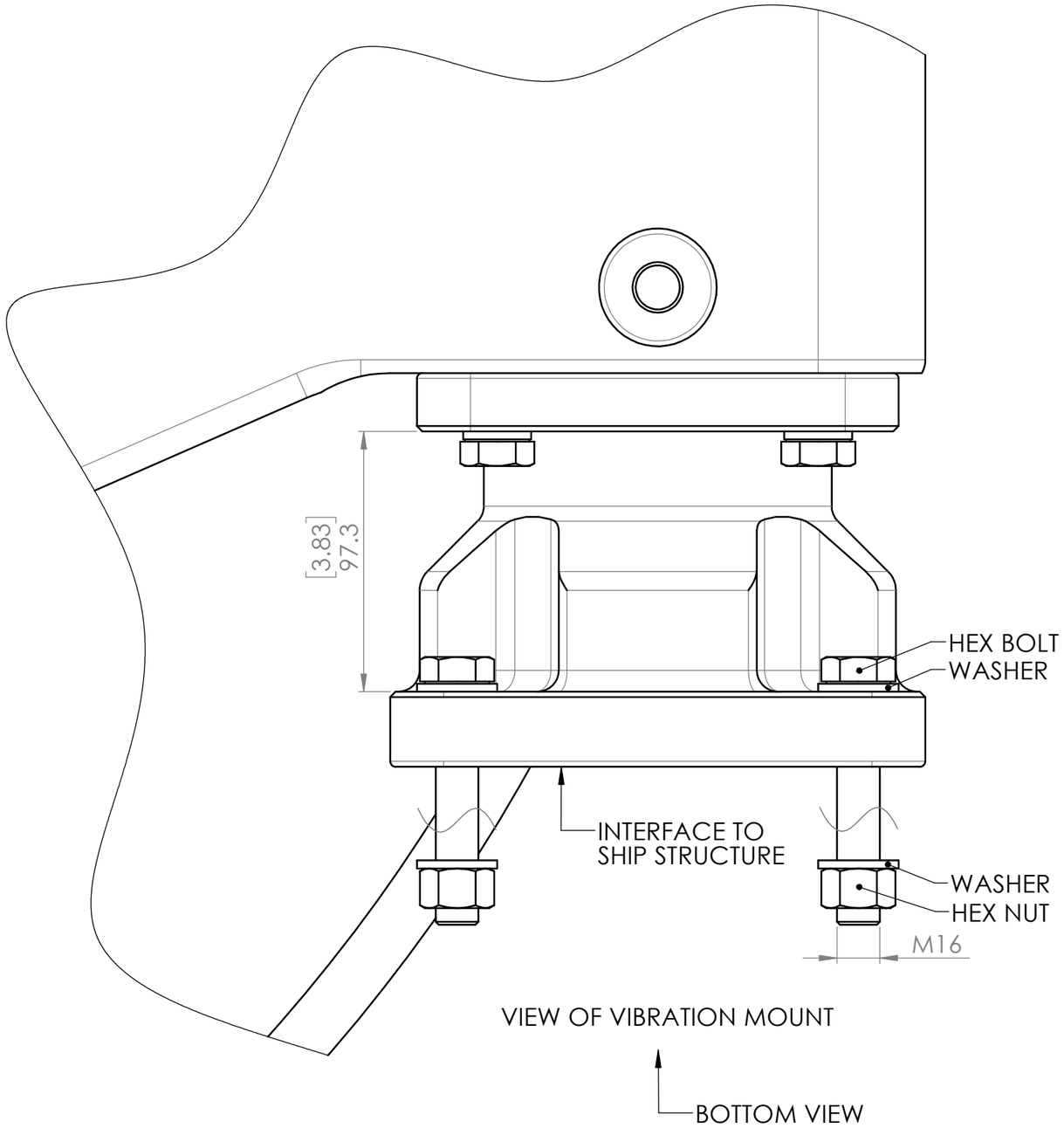

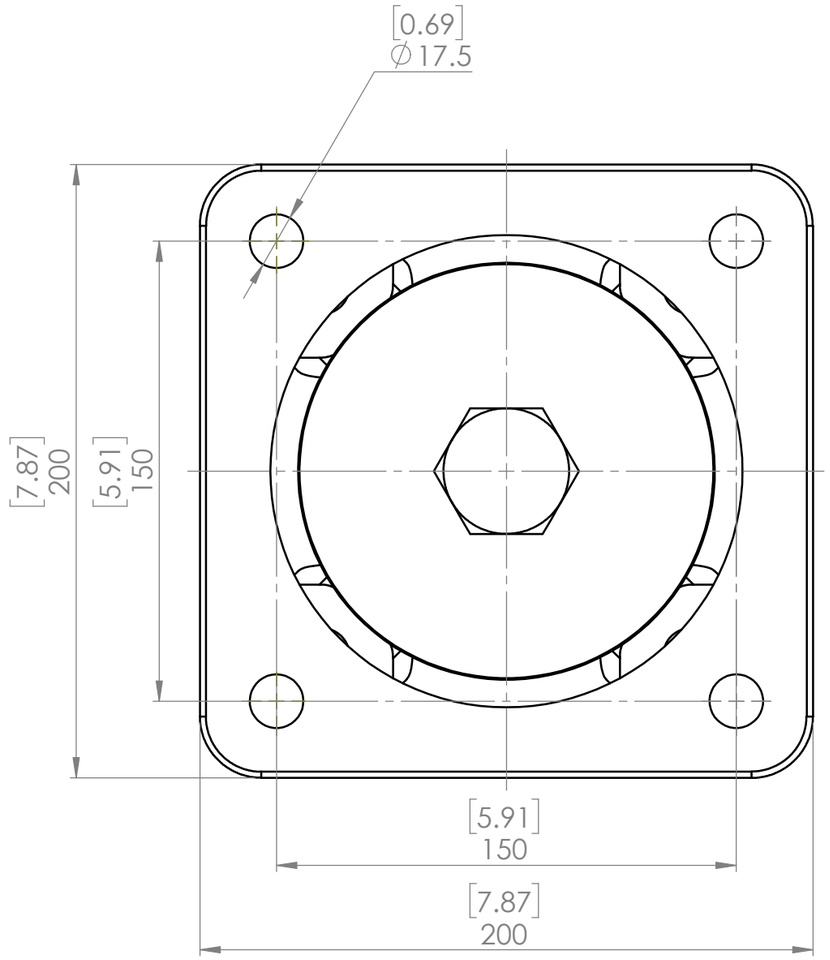

BOTTOM VIEW

VEEM GYRO 120 SD

PART/ASSEMBLY No: 0400-AM-1000	MASS: 2755kg
DESCRIPTION: MOUNTING INTERFACE	
DRG No: 0400-DT-1000.06	REV: 9
ALL DIMENSIONS IN: mm DIMENSIONS IN BRACKETS: [Inches]	
SHEET: 06 OF 10	SCALE: 1:2
SHEET SIZE: A3	

DRAFTING TO AS 1100.101 AND 1100.201

TOLERANCES IN ACCORDANCE WITH -

COPYRIGHT 2018 - ALL RIGHTS RESERVED BY VEEM LTD. THIS DRAWING HAS BEEN PRODUCED BY VEEM LTD. NO PART MAY BE COPIED, MODIFIED OR REPRODUCED IN ANY MANNER WITHOUT PRIOR WRITTEN APPROVAL OF VEEM LTD - www.veem.com.au

VEEM ENGINEERING GROUP
22 BAILE RD
CANNING VALE, WA 6155
TEL: +61 8 9455 9355
FAX: +61 8 9455 9333
email: veem@veem.com.au

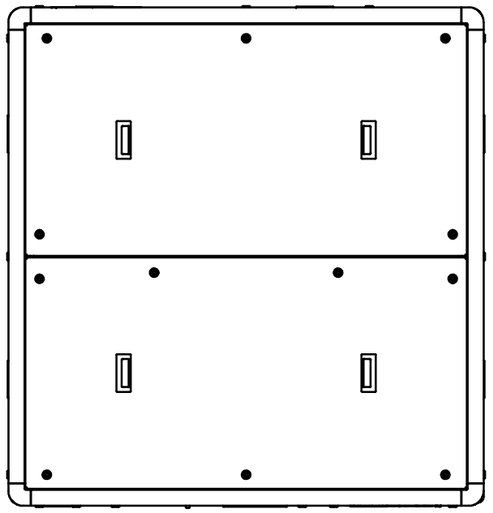

TOP VIEW

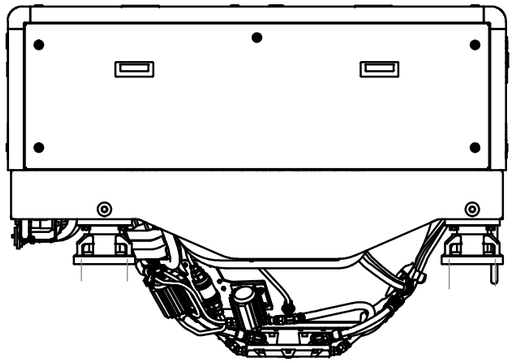

LEFT PANEL VIEW

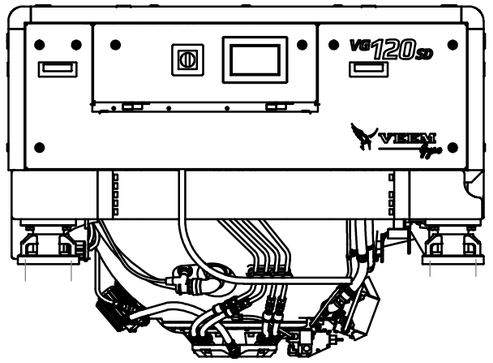

FRONT PANEL VIEW

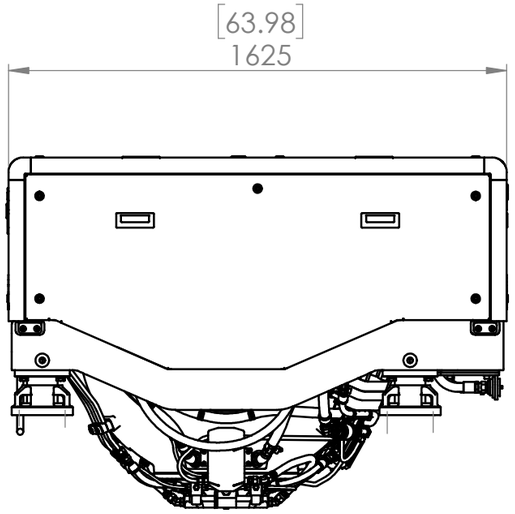

RIGHT PANEL VIEW

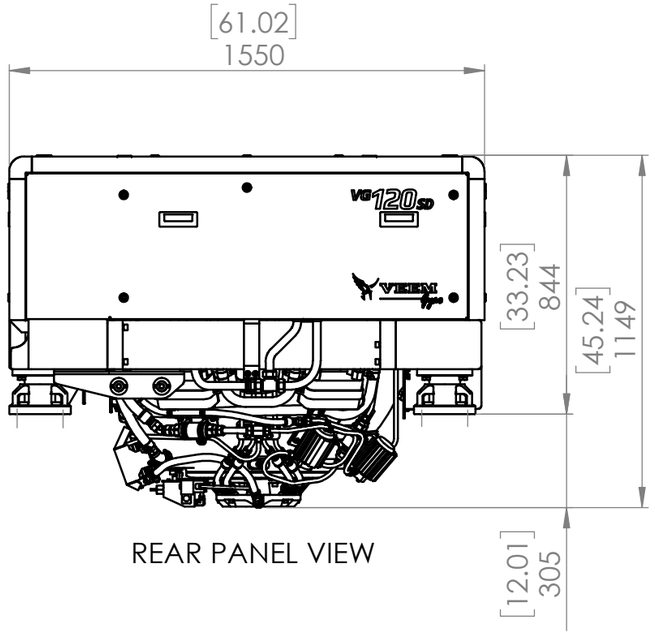

REAR PANEL VIEW

ALL DIMENSIONS IN: mm
DIMENSIONS IN BRACKETS: [Inches]

VEEM GYRO 120 SD

PART/ASSEMBLY No: 0400-AM-1000	MASS: 2755kg
DESCRIPTION: INSTALLATION DRAWING	
DRG No: 0400-DT-1000.07	REV: 9
MATERIAL: SEE BOM	PROCESS: ASSEMBLY
SHEET: 07 OF 10	SCALE: 1:20
SHEET SIZE: A3	

DRAFTING TO AS 1100.101 AND 1100.201

TOLERANCES IN ACCORDANCE WITH -

COPYRIGHT 2018 - ALL RIGHTS RESERVED BY VEEM LTD. THIS DRAWING HAS BEEN PRODUCED BY VEEM LTD. NO PART MAY BE COPIED, MODIFIED OR REPRODUCED IN ANY MANNER WITHOUT PRIOR WRITTEN APPROVAL OF VEEM LTD - www.veem.com.au

VEEM ENGINEERING GROUP
22 BAILE RD
CANNING VALE, WA 6155
TEL: +61 8 9455 9355
FAX: +61 8 9455 9333
email: veem@veem.com.au

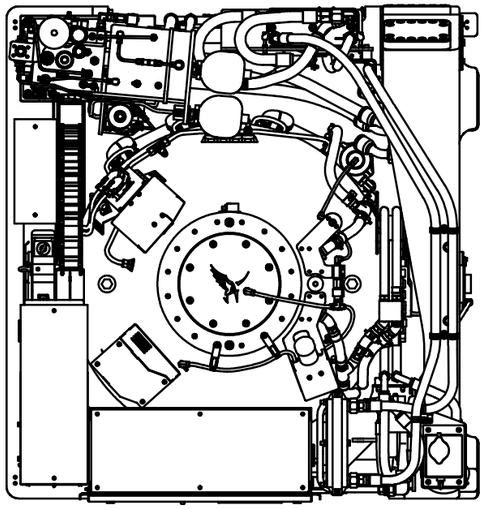

TOP VIEW

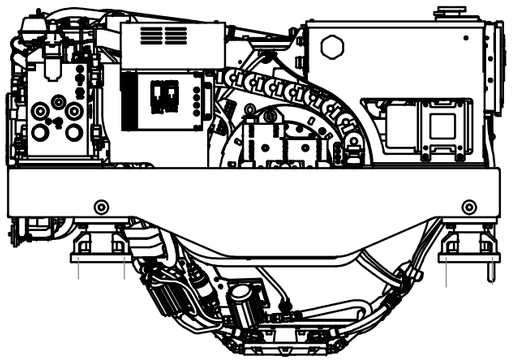

LEFT PANEL VIEW

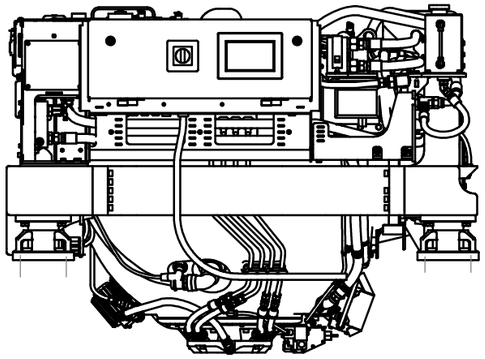

FRONT PANEL VIEW

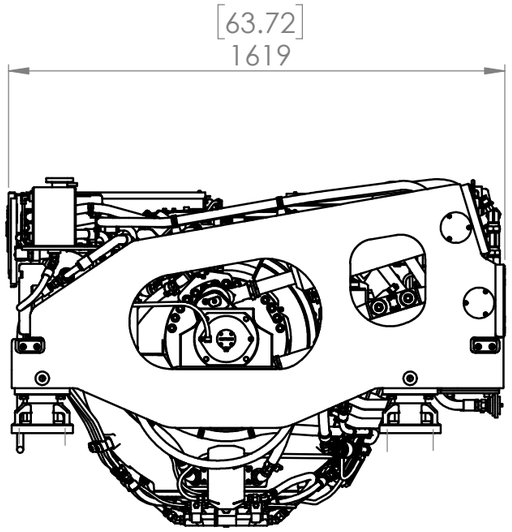

RIGHT PANEL VIEW

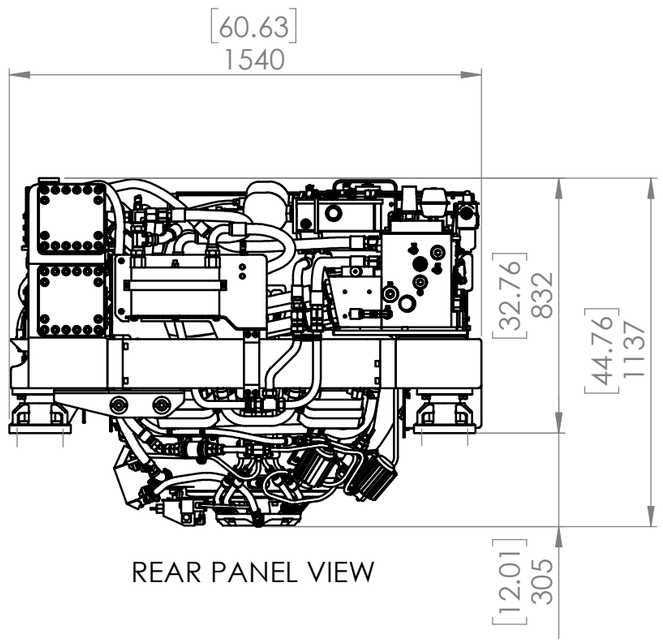

REAR PANEL VIEW

ALL DIMENSIONS IN: mm
DIMENSIONS IN BRACKETS: [Inches]

	VEEM GYRO 120 SD		
	PART/ASSEMBLY No: 0400-AM-1000	MASS: 2755kg	
DRAFTING TO AS 1100.101 AND 1100.201	DESCRIPTION: INSTALLATION DRAWING		
TOLERANCES IN ACCORDANCE WITH -	DRG No: 0400-DT-1000.08		REV: 9
	MATERIAL: SEE BOM	PROCESS: ASSEMBLY	
	SHEET: 08 OF 10	SCALE: 1:20	SHEET SIZE: A3

VEEM Gyro

COPYRIGHT 2018 - ALL RIGHTS RESERVED BY VEEM LTD. THIS DRAWING HAS BEEN PRODUCED BY VEEM LTD. NO PART MAY BE COPIED, MODIFIED OR REPRODUCED IN ANY MANNER WITHOUT PRIOR WRITTEN APPROVAL OF VEEM LTD - www.veem.com.au

VEEM ENGINEERING GROUP
22 BAILE RD
CANNING VALE, WA 6155
TEL: +61 8 9455 9355
FAX: +61 8 9455 9333
email: veem@veem.com.au

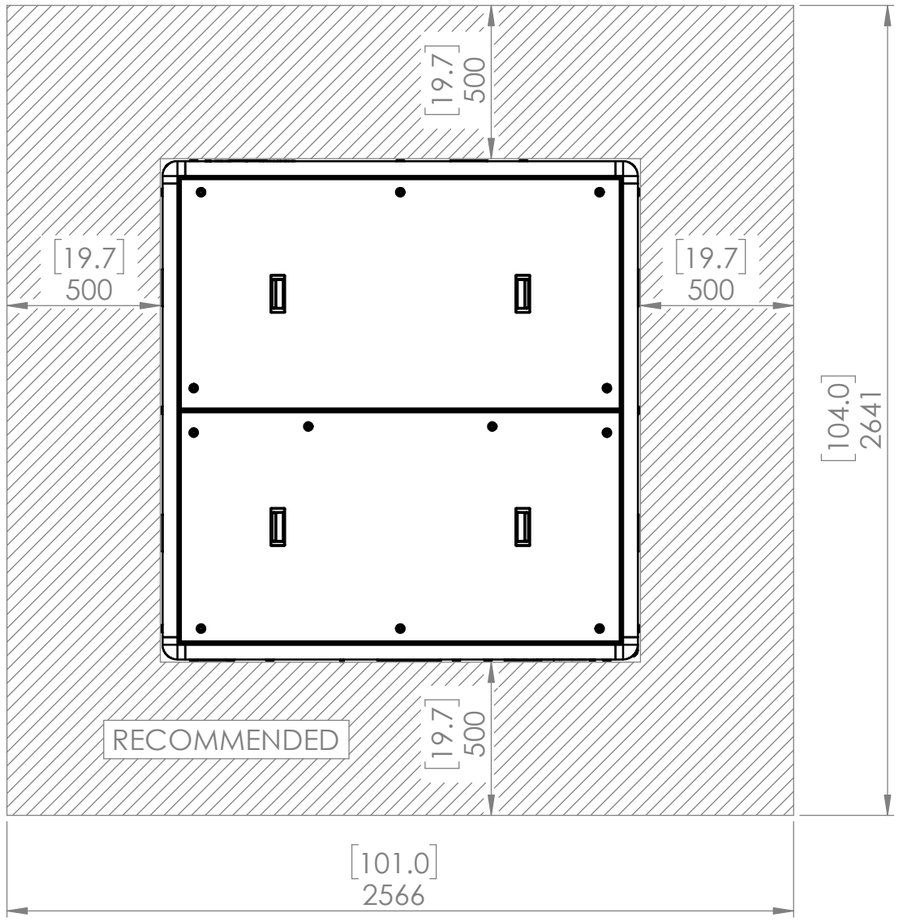

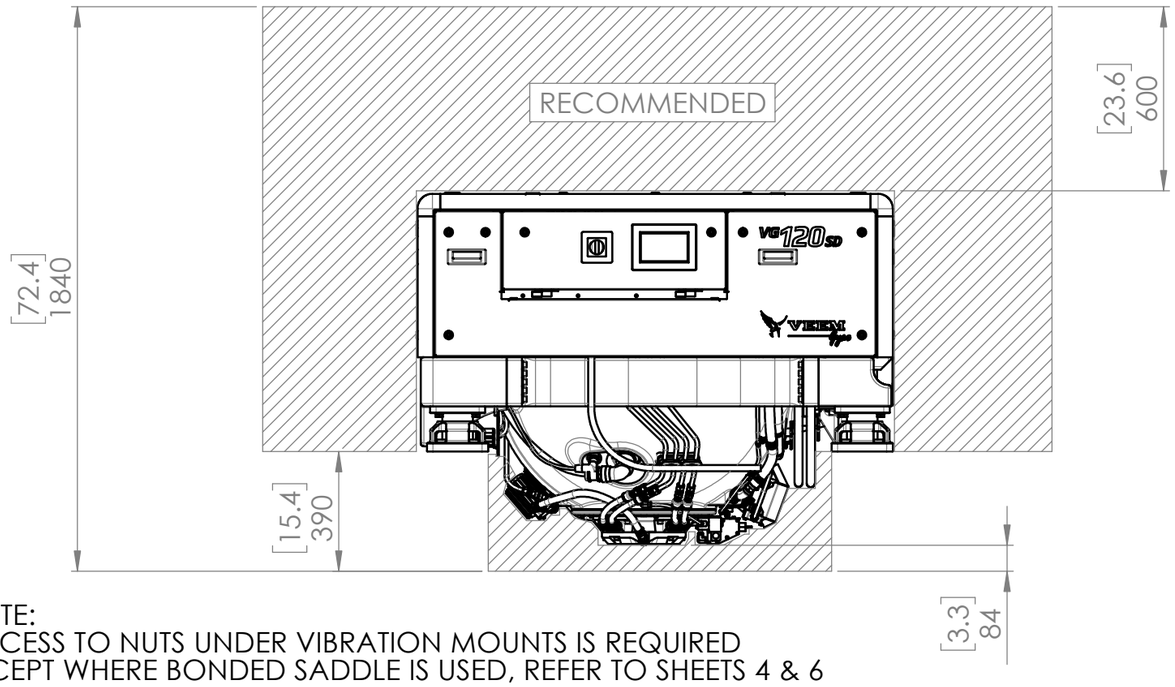

RECOMMENDED

OPERATING AND MAINTENANCE
SPACE REQUIREMENTS

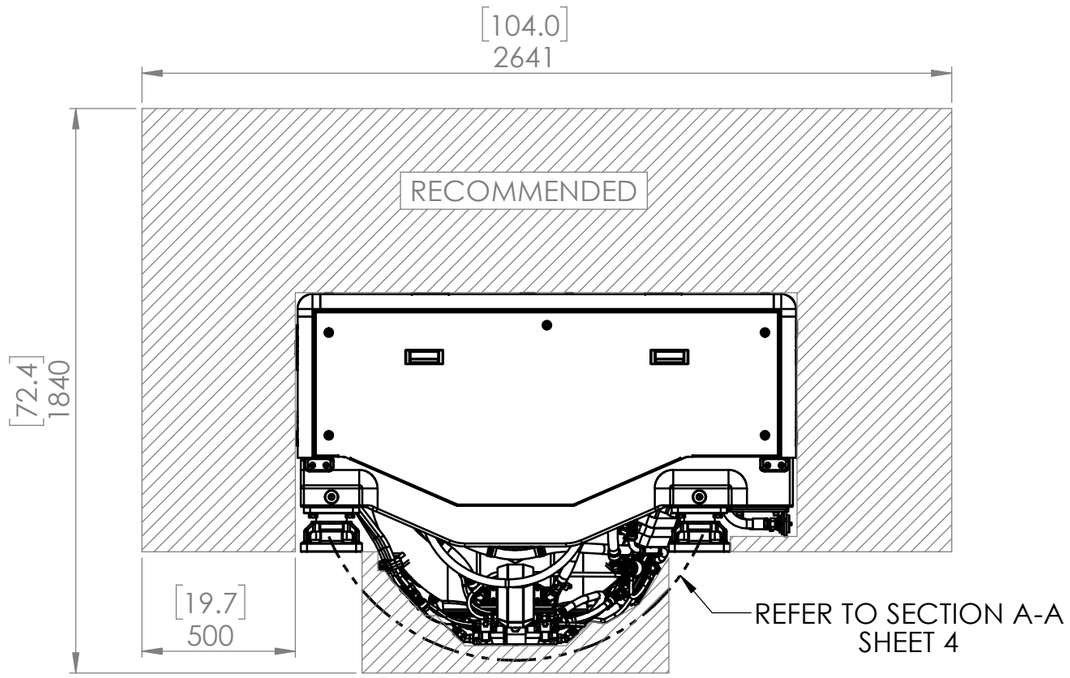

SIDE VIEW

NOTE:
ACCESS TO NUTS UNDER VIBRATION MOUNTS IS REQUIRED
EXCEPT WHERE BONDED SADDLE IS USED, REFER TO SHEETS 4 & 6

VEEM Gyro

COPYRIGHT 2018 - ALL RIGHTS RESERVED BY VEEM LTD. THIS DRAWING HAS BEEN PRODUCED BY VEEM LTD. NO PART MAY BE COPIED, MODIFIED OR REPRODUCED IN ANY MANNER WITHOUT PRIOR WRITTEN APPROVAL OF VEEM LTD - www.veem.com.au

VEEM ENGINEERING GROUP
22 BAILE RD
CANNING VALE, WA 6155
TEL: +61 8 9455 9355
FAX: +61 8 9455 9333
email: veem@veem.com.au

DRAFTING TO AS 1100.101 AND 1100.201

TOLERANCES IN ACCORDANCE WITH -

VEEM GYRO 120 SD		
PART/ASSEMBLY No: 0400-AM-1000	MASS: 2755kg	
DESCRIPTION: INSTALLATION DRAWING		
DRG No: 0400-DT-1000.09		REV: 9
ALL DIMENSIONS IN: mm DIMENSIONS IN BRACKETS: [Inches]		
SHEET: 09 OF 10	SCALE: 1:20	SHEET SIZE: A3

MINIMUM REQUIREMENTS

OPERATING AND MAINTENANCE
SPACE REQUIREMENTS

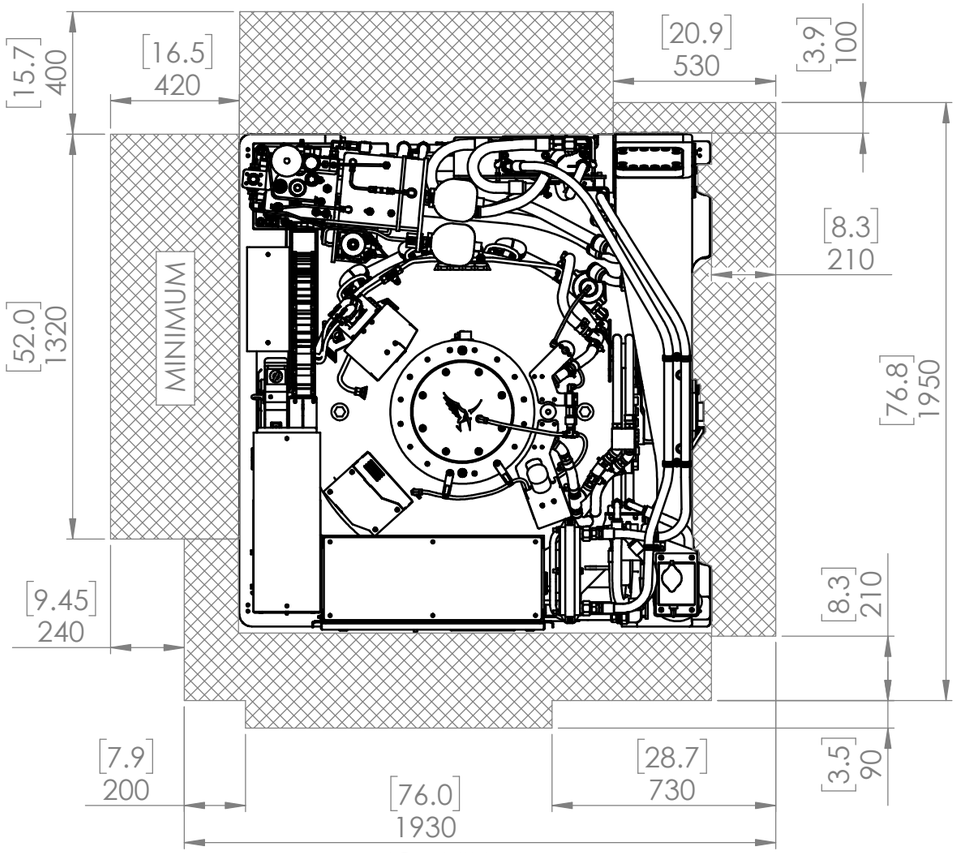

TOP VIEW

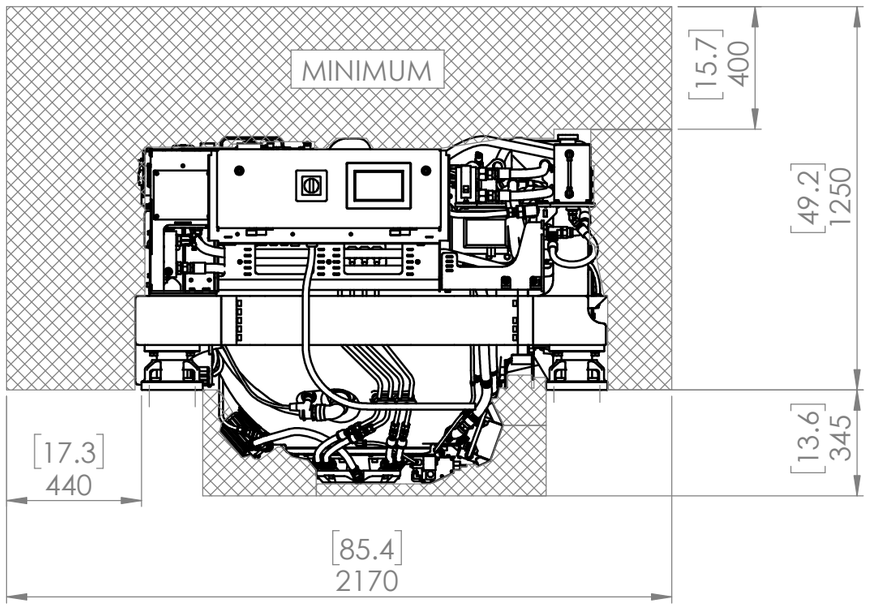

FRONT PANEL VIEW

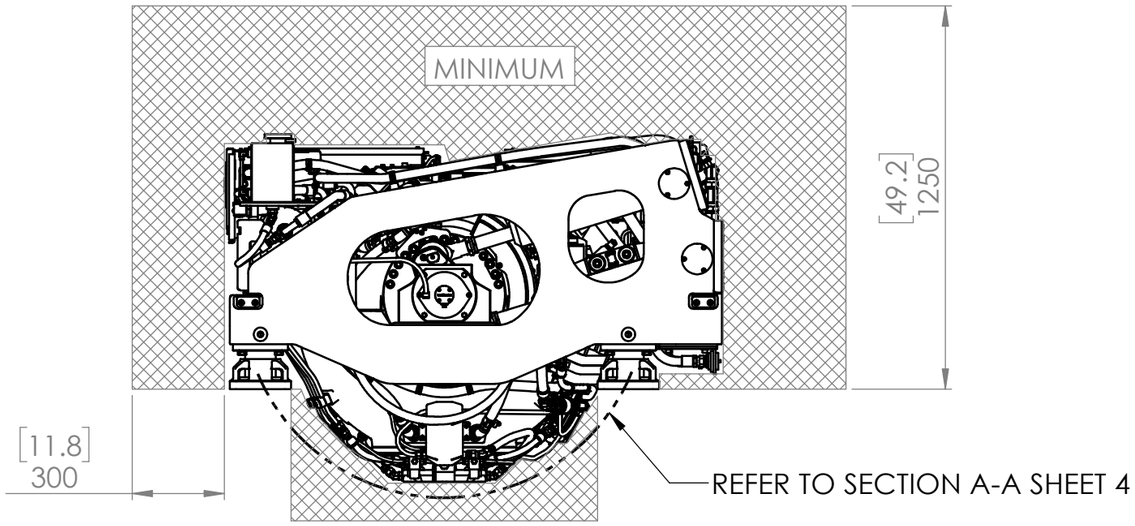

SIDE VIEW

NOTE:
ACCESS TO NUTS UNDER VIBRATION MOUNTS IS REQUIRED
EXCEPT WHERE BONDED SADDLE IS USED, REFER TO SHEETS 4 & 6

VEEM GYRO 120 SD

PART/ASSEMBLY No	MASS
0400-AM-1000	2755kg

DRAFTING TO AS 1100.101 AND 1100.201

TOLERANCES IN ACCORDANCE WITH -

DESCRIPTION: INSTALLATION DRAWING

DRG No: 0400-DT-1000.10 REV: 9

ALL DIMENSIONS IN: mm
DIMENSIONS IN BRACKETS: [Inches]

SHEET: 10 OF 10 SCALE: 1:20 SHEET SIZE: A3

COPYRIGHT 2018 - ALL RIGHTS RESERVED BY VEEM LTD. THIS DRAWING HAS BEEN PRODUCED BY VEEM LTD. NO PART MAY BE COPIED, MODIFIED OR REPRODUCED IN ANY MANNER WITHOUT PRIOR WRITTEN APPROVAL OF VEEM LTD - www.veem.com.au

VEEM ENGINEERING GROUP
22 BAILE RD
CANNING VALE, WA 6155
TEL: +61 8 9455 9355
FAX: +61 8 9455 9333
email: veem@veem.com.au