How Gyrostabilizers Work

By Paul Steinmann
Product Manager – VEEM Gyro

Less Motion, More Ocean

Table of Contents

VEEM Gyro

Introduction

This whitepaper provides a comprehensive introduction to the features and operational principles of marine gyrostabilizers. It is intended to answer some of the many questions that owners, Captains, crew, and shipyard personnel have about this relatively new and exciting roll stabilization solution. With the release of the VEEM Gyro range, powerful gyrostabilizers providing real solutions for superyacht and megayacht applications, are available for the first time.

In the late 1990's, the author was a fin-stabilizer designer and international sales manager. After reading through very old technical papers from the early 1900's, he built a small model gyrostabilizer with a colleague and installed it in a tank-test model from a previous fin-stabilizer project. The astonishing results triggered a fascination, that became a conviction that here in the work begun over 100 years ago, was the future of marine stabilization.

CHAPTER ONE

What is a Marine Gyrostabilizer?

VEEM Gyro

What is a Marine Gyrostabilizer?

A marine gyrostabilizer is a device for reducing the rolling of boats and ships in waves.

The device comprises a flywheel mounted in a gimbal frame allowing two of the three possible rotational degrees of freedom. This gimbal frame is then rigidly mounted to the hull of the vessel**, with the flywheel gimbaled within the frame. Most often the device is located in the engine room of the vessel.

Keep reading this chapter for a more detailed description, …or skip to the next chapter!

** In this document I refer to a ship or a boat as a vessel.

What is a Marine Gyrostabilizer? …continued

The specific way in which the flywheel is constrained in rotational motion allows the angular momentum of the spinning flywheel to combine with the flywheel's precession oscillation to generate large torques which vary with time to directly oppose the dynamic wave-induced rolling motion.

For VEEM Gyros, precession motion is the oscillation back and forth through a maximum of ±70 degrees in the vessel's pitching axis. Precession rate, is the rotational speed of this oscillation.

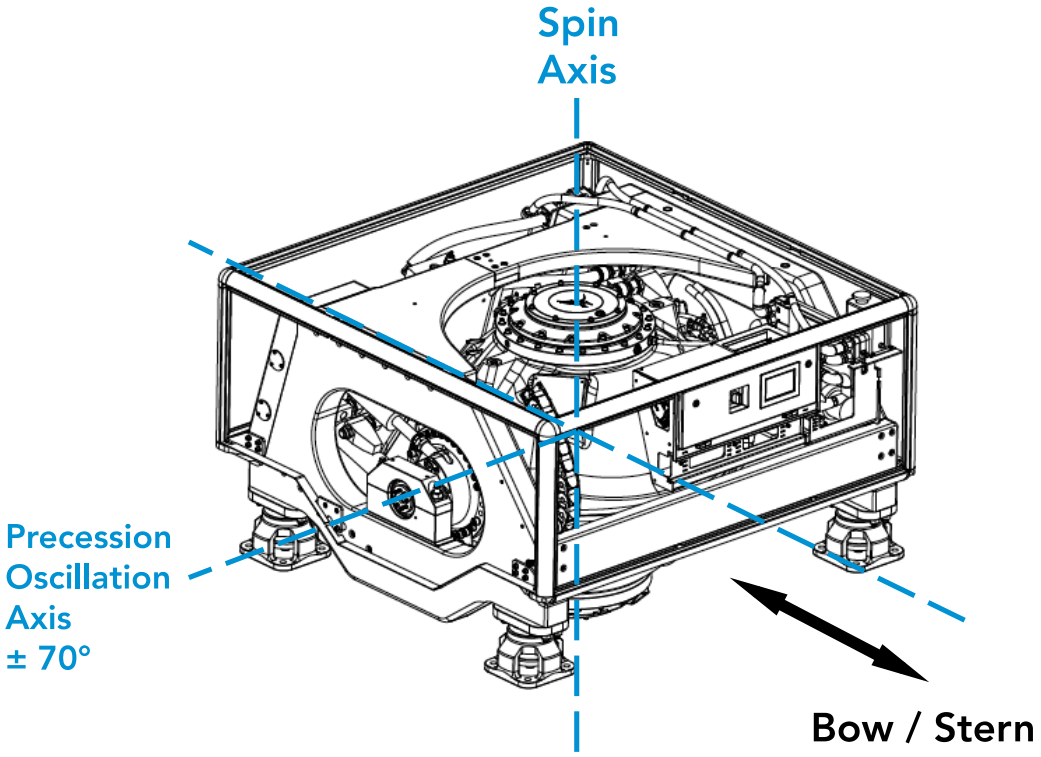

Angular momentum, is the rotational inertia of a body, multiplied by the speed of rotation. This is a rotational analog to linear momentum where the momentum is equal to the mass of the body multiplied by its speed of movement.

What is a Marine Gyrostabilizer? …continued

The unique gyro-dynamics established by the specific gimbaling arrangement means that without any intervention, the vessel rolling motion combines with the flywheel angular momentum to cause oscillating precession motion. Again without any intervention, the precession motion combines with the flywheel angular momentum to create stabilizing torque, which directly opposes the wave induced rolling motion. Note that the precession oscillation is caused by the rolling motion, in a plane at 90 degrees to the rolling motion (the pitch axis), and then in turn, the stabilizing torque is caused by the precession motion in a plane at 90 degrees to the precession motion (the roll axis). All of this happens at the same instant so that the stabilizing torque is perfectly synchronised to the wave induced rolling motion. This is a unique and advantageous feature of gyrostabilizers (see discussion in Chapter Four).

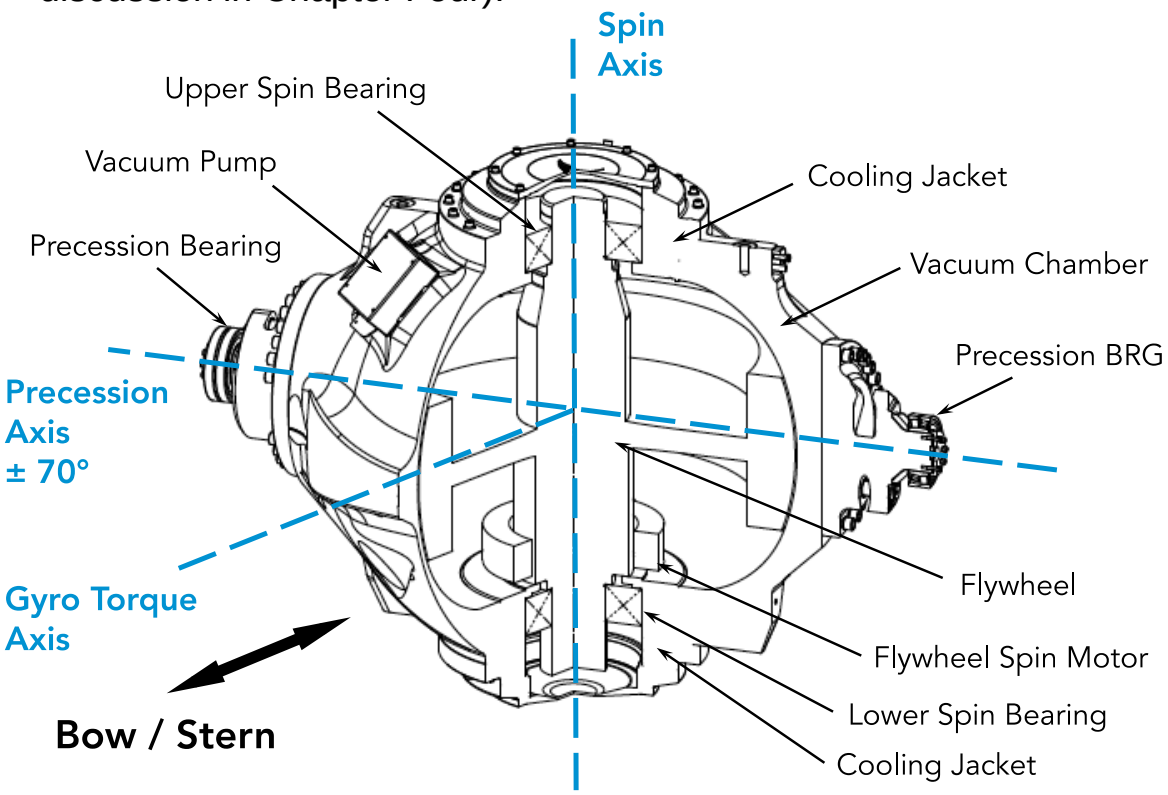

What is a Marine Gyrostabilizer? …continued

So, by arranging the gimbals in a specific way, a roll stabilizing device is created using the naturally occurring physics of gyro-dynamics. This gyro-dynamics requires no further intervention in order to function…except in the case where the stabilizing torque created is less than the wave induced rolling torque and the rolling motion is not completely attenuated.

Unfortunately, this is almost always the case as all mechanical devices have limited capacity. There is a limit to the size and mass of gyrostabilizer that can practically be installed in any given vessel. Therefore, intervention is required in order to manage the precession rotation.

There are two aspects of the precession motion that must be managed; the angular range, and the rate of precession.

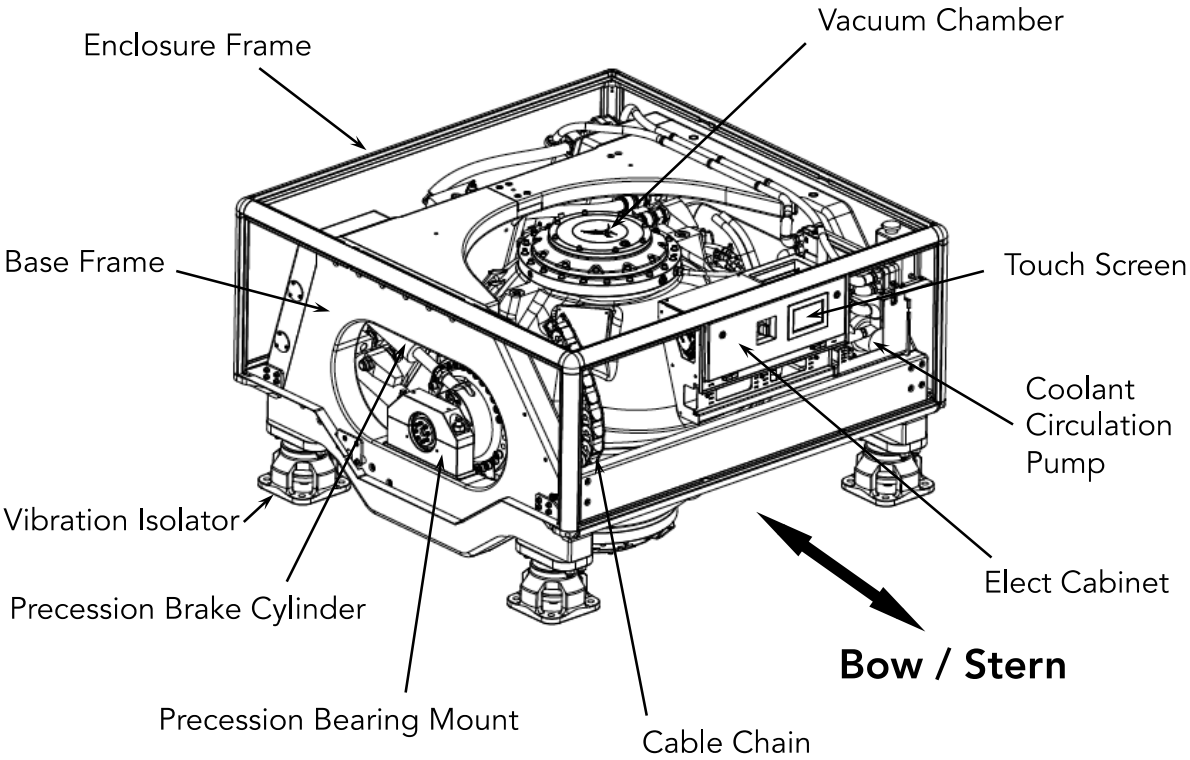

What is a Marine Gyrostabilizer? …continued

The gyro-dynamic torque acts in the plane of the flywheel spin axis, and the athwart-ship (side to side of the vessel) precession axis. Therefore, a component of the gyro-dynamic torque acts in the rolling plane, but when the precession angle is away from vertical, a component of the gyro-dynamic torque also acts in the yaw (or steering) axis of the vessel (for vertical-spin-axis gyros). Because the inertia and damping of the yaw axis is much higher than in the roll axis, this so called cross-torque is insignificant, and does not affect steering. However, at 90 degrees precession angle, the effective roll stabilizing torque becomes zero, so angles approaching 90 degrees should be avoided. Practically, the precession angular range should be limited to within say +/- 70 degrees.

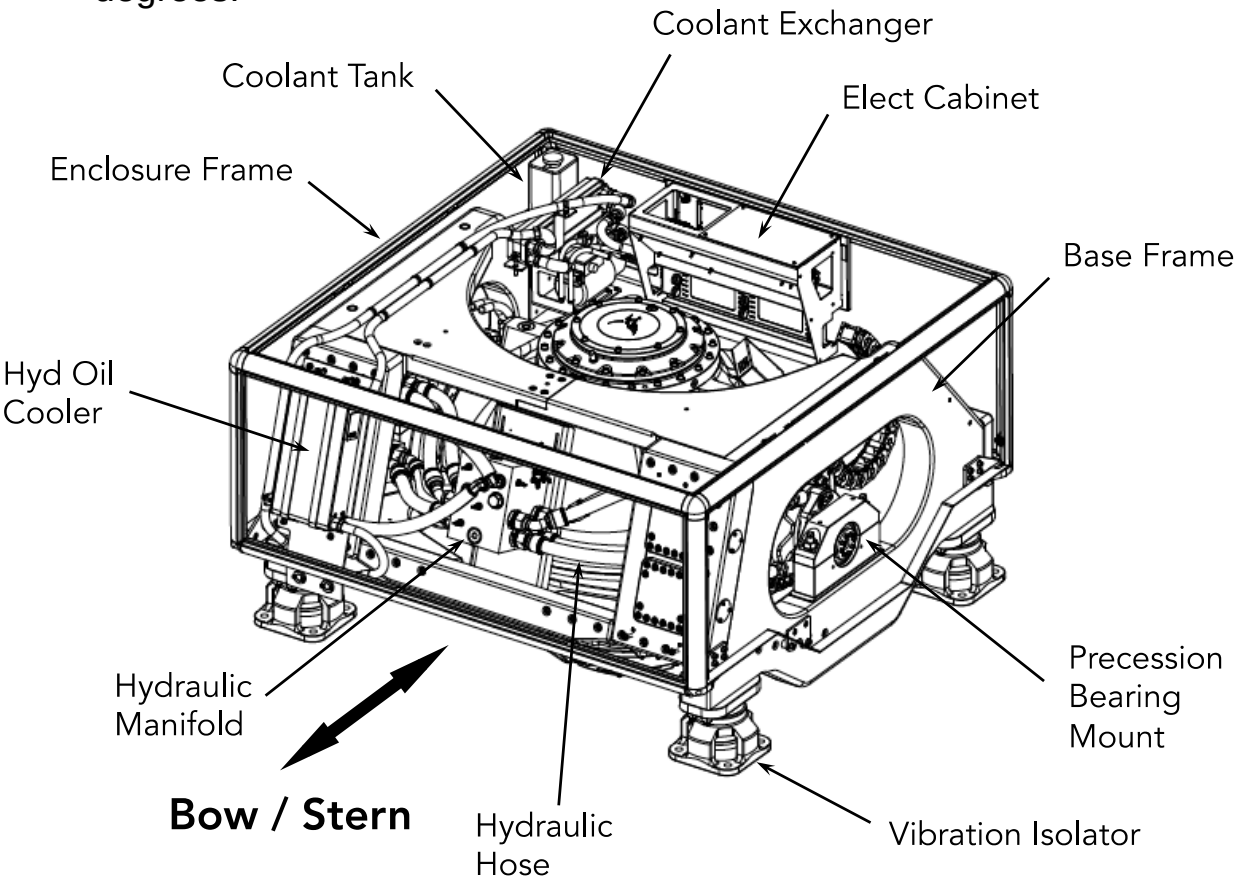

What is a Marine Gyrostabilizer? …continued

The gyro-dynamic torque created by the combination of the flywheel angular momentum and the precession oscillation is proportional to the angular momentum and also to the precession rate. So at a fixed rpm the angular momentum is a constant. Therefore, the gyro-dynamic torque is directly proportional to the precession rate. This is interesting, because it leads to the conclusion that if the flywheel was to precess very quickly, up to infinitely quickly, then a gyro could theoretically produce an infinite gyro-dynamic torque. In order to limit the amount of gyro-dynamic torque created (to allow a practical structure to be built to contain the loads) the precession rate must be controlled or limited.

So our perfect stabilizing device, created by a specific set of gimbal constraints, works automatically due to physics. However the precession oscillation range and the rate of precession oscillation must be managed to within desirable limits. For VEEM Gyros, this is the role of the hydraulic cylinders and the electronic control system.

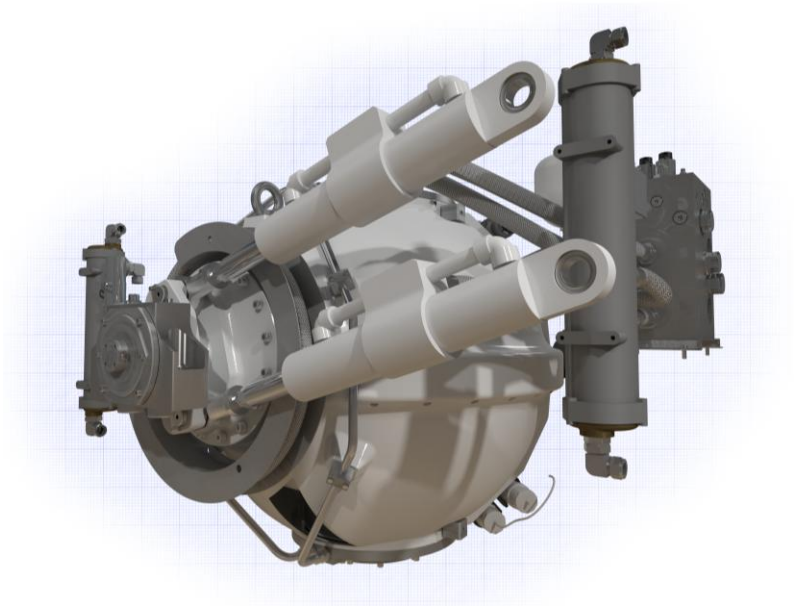

CHAPTER TWO

Types of Gyrostabilizer

The key technical features that differentiate between modern marine-gyrostabilizer products are as follows:

- **Vertical vs Horizontal Spinning Axis**
- **Natural vs Driven Precession**
- **Active vs Passive Precession Motion Control**
- **Robustness**

This chapter examines these differentiating features.

Vertical vs Horizontal Spinning Axis

Although theoretically both of these approaches produce effective stabilizing torque, there are a couple of noteworthy differences.

The main problem with a horizontal spinning axis is that it does not allow the use of natural precession. The resistance of the slewing-ring type bearings used is excessive, and requires that the precession motion be driven to overcome this resistance.

Another limitation of a horizontal spin axis is that it is not convenient to provide the precession motion with an equilibrium point at zero precession angle. For vertical-spin-axis gyros, it is possible to arrange the precession bearing shafts so that the CG of the cage assembly holding the flywheel is lower than the shaft-line. This ensures that the precession angle always tends towards vertical. This feature allows the advantages of natural precession (see over) to be utilised.

VEEM Gyros all feature a vertical spinning axis.

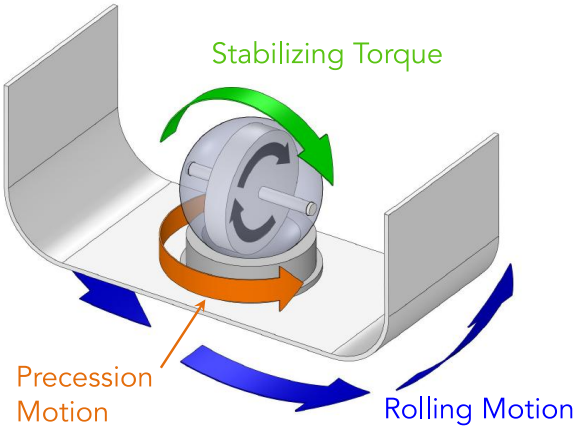

Horizontal Spin Axis

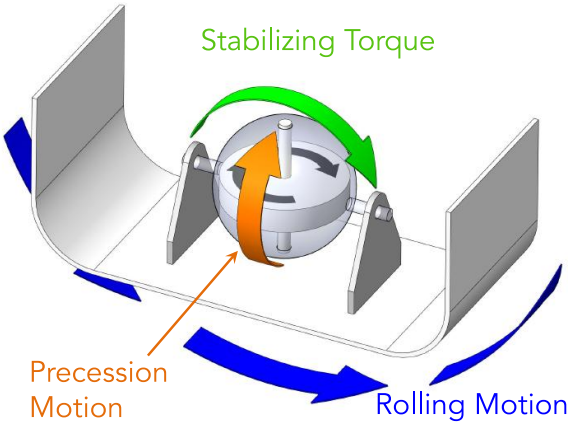

Vertical Spin Axis

Chapter Two :
Types of Gyrostabilizer

Natural vs Driven Precession Motion

As described in Chapter Four, gyrostabilizer precession motion is a naturally occurring response. Utilising this naturally-occurring-precession-motion means that the stabilizing torque of the gyro is always perfectly synchronised with the vessel roll, regardless of how quick, slow or random the rolling motion may appear. This eliminates and inefficiencies caused by slow sensors, electrical or hydraulic systems and ensures a perfectly timely response in all conditions.

For vessels with longer roll periods, the lower roll rate in small waves may result in less torque created to provide full precession range. This can create a band of rolling motion in which the gyro either does not respond, or responds less vigorously than it could. Onboard, this may be seen as a lack of responsiveness in small waves. Driving the precession motion, can virtually eliminate this dead-band. This option may be advantageous for some mega-yachts, or larger commercial vessels. The downside is the additional power requirement, additional space, and additional cost of the motive power unit. The driven precession option requires either PTO hydraulic pumps or a separate power pack.

I recommend considering driven precession only where the benefits clearly outweigh the disadvantages.

VEEM Gyros are supplied with either natural or driven precession.

Active vs Passive Precession Motion Control

Most modern gyros feature active precession control. This is a key technology advancement that gives modern gyros their high efficiency across a wide range of conditions. VEEM Gyros have a highly sophisticated control system which is a point of differentiation to other market offerings.

In order to ensure optimal performance across a wide range of wave conditions without the need for user adjustments, the control system should also be adaptive. Adaptive control systems automatically search for optimal control settings without needing to be tuned by an operator. When executed well, this means the system is both simple to use, and also continually optimised.

VEEM Gyros all feature active, adaptive control systems.

Robustness

A key, but often over-looked feature of gyrostabilizers is the robustness of the base frame and the precession-motion-control system. As larger waves cause larger rolling rates, the torque induced in the precession axis continues to grow. In order to control the increased precession rates, the mechanism for controlling the precession motion must be able to over-come these ever increasing torques. When the torque induced in the precession axis exceeds the capacity of the precession control mechanism, the gyro must either shut down to protect itself from damage or progressively de-rate to achieve the same. An under-sized precession control mechanism will result in premature shut-down as wave conditions build.

VEEM Gyros are designed and built to ensure that they continue to provide roll stabilization as seas become severe.

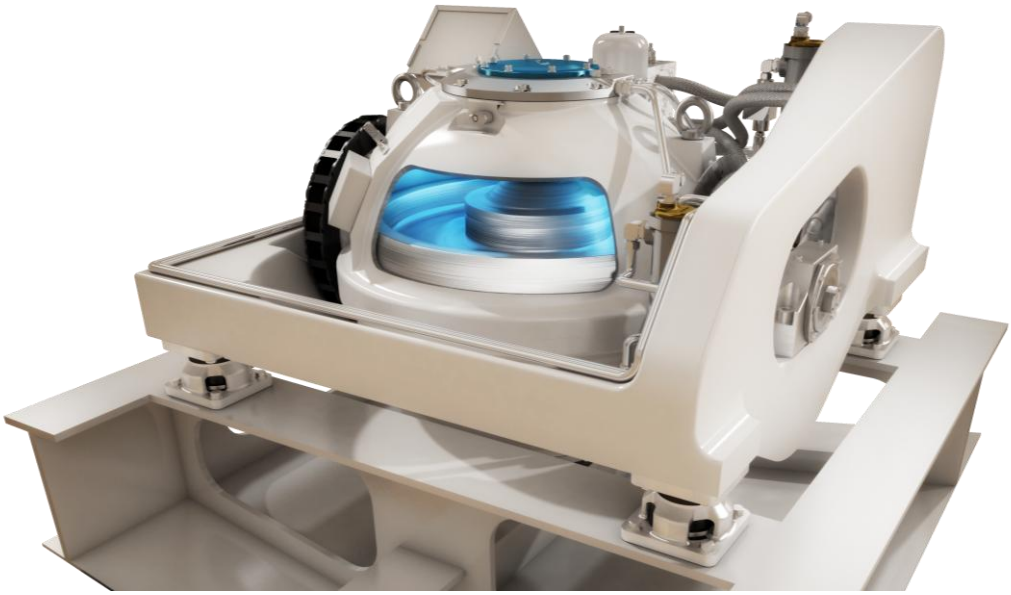

Chapter Two :
Types of Gyrostabilizer

CHAPTER THREE

How Gyro-Stabilizing Torque is Created

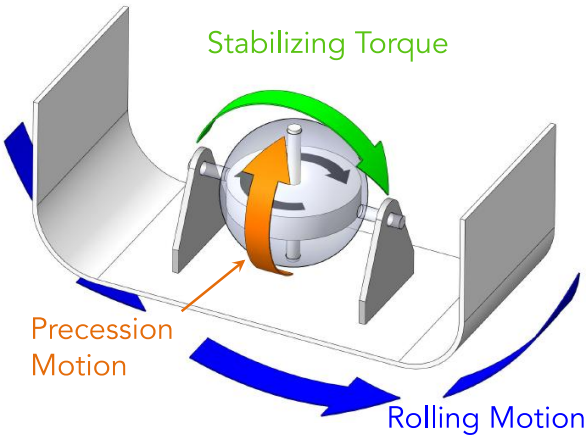

VEEM Gyro

The Short Version

There are three inter-twined parts to the process of creating gyro-stabilizing torque. Note that each of these things is simultaneously occurring at the same instant in time, but it is helpful to consider each of them separately. Once the flywheel is spinning, the following process leads to the development of a stabilizing torque that opposes rolling motion:

1. **Waves cause the vessel to roll**

2. **Rolling motion combines with the spinning flywheel to create precession motion**

3. **Precession motion combines with the spinning flywheel to create stabilizing torque**

The physics that causes these inter-twined actions is called gyro-dynamics. If the flywheel spins in the opposite direction, the induced precession motion will be in the opposite direction, but the stabilizing torque will be identical.

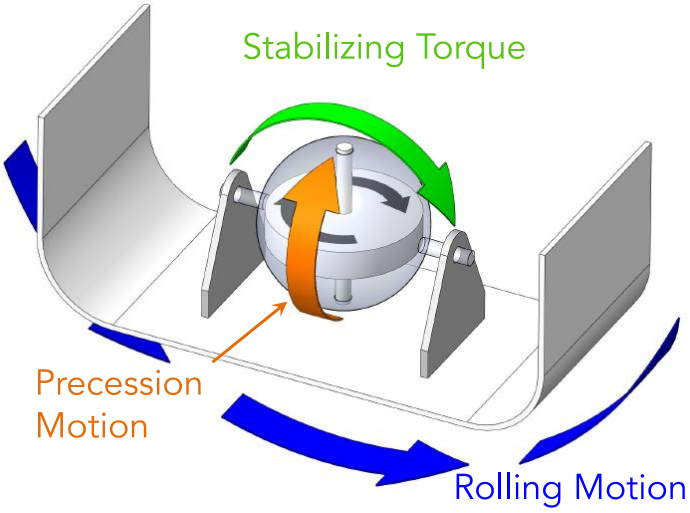

A More Detailed Explanation

Hey, skip this section unless you are really interested as it gets a bit long.

The Fundamentals

The fundamentals of gyro-dynamics are that if a torque is applied to a spinning mass (flywheel) in a plane containing the spin axis, then this torque is bent through 90 degrees by the flywheel's angular momentum. There is a direct mathematical relationship between the torque initially applied and the rate of rotation created in the axis at 90 degrees. You may have noticed that when you handle a spinning angle grinder it feels strange. This is because as you rotate the grinder in your hands, gyro-dynamics applies a torque at right angles to the rotation. This is what gives the strange sensation that the grinder is trying to wriggle out of your hands.

How the VEEM Gyro is Configured

Our gyrostabilizers make use of this strange phenomenon. By spinning the flywheel in a cage (the vacuum chamber), which in turn is then suspended on a shaft that runs on bearings across the beam of the vessel (athwartships), we allow the flywheel to rotate in only two of the possible three degrees of freedom. It can spin about its spin shaft axis, it can rock back and forth in its precession bearings, but it cannot rotate (roll) in the ships roll axis. Setting the flywheel up this way allows us to make use of the 90 degree-bending-of-torque-into-rotational-motion (gyro-dynamics) of a flywheel.

A More Detailed Explanation cont’

Are you still reading? We need to talk!

This is how gyro-dynamics works to make a gyrostabilizer:

First, waves cause the ship to roll about it's roll axis. Because the spinning flywheel is effectively locked into the ship's roll axis by the precession bearing mounts, the flywheel also rolls about this roll axis.

Second, this rolling rate on the spinning flywheel creates a torque at 90 degrees to the roll axis. That is, on the ship’s pitching axis (bow to stern) and the gyro’s precession axis.

Third, because we have allowed the flywheel to rotate in the ship’s pitching axis (instead of hanging-on and stopping this motion, as in the grinder case), the applied torque results in a rotational rate about the precession axis.
(The roll rate of the vessel directly determines the rate of precession)

Fourth, now that the flywheel is rotating about the precession axis, the gyro-dynamics creates a torque at 90 degrees to the precession axis. This happens to be the ship’s rolling axis. Very conveniently for us, the torque created by the combination of the flywheel's angular momentum and the precession rate is in exactly the opposite direction to the rolling motion of the vessel. So, we have a device that naturally wants to oppose the wave-induced rolling motion of the vessel.

If we did not allow the flywheel to rotate in the ships pitching axis (to precess), then there would be no stabilizing effect at all. This is how we turn the gyro OFF at sea when we don't want stabilization. We simply lock the precession axis to prevent the flywheel from rocking in the ship’s pitching axis. Instantly the generation of stabilizing torque stops. In reverse, when we want to turn the gyro ON, we simply unlock the precession axis to allow the flywheel to start rocking backwards and forwards again. The stabilizing torque immediately begins to be generated again as soon as the vessel rolls; following the steps described above.

For a more detailed technical description, please see VEEM Gyro Whitepaper 1403 available for download at www.veemgyro.com. Just click on the Whitepapers icon.

Chapter Three :
How Gyro-Stabilizing Torque is Created

CHAPTER FOUR

How Gyros Provide a Higher Quality of Comfort

VEEM Gyro

What Causes the Jerkiness of Fins?

Unlike gyros, fin stabilizers produce a slight jerkiness that you can feel when they are working. These jerky motions are caused by completely different things when the vessel is underway, and when at rest. In contrast, gyros provide extremely smooth stabilization. The difference must be experienced to be believed. Here's how and why.

Fin Jerkiness Underway

When the vessel is underway this jerkiness is caused by a delay, or lag, between the wave-induced rolling motion, and the generation of an opposing stabilizing torque by the fins. This lag is the sum of the time it takes to sense the rolling motion and read that into a processor, compute an appropriate response, send that command to a force generator (hydraulic valve or electric motor drive), for the mechanical system to react, for the fin(s) to change their angle of attack, and then importantly, for the water-flow around the fin to re-establish a new flow pattern which generates lift. Most of the causes of lag listed above have been significantly reduced over time by improvements in sensors, electronics, network speeds, hydraulic systems, etc. However the one cause of lag that remains is the time it takes for the water to change its flow pattern around the new fin position and generate lift. This lag is modeled by Theodorsen's Circulation Function and represented by Wagner's function as below.

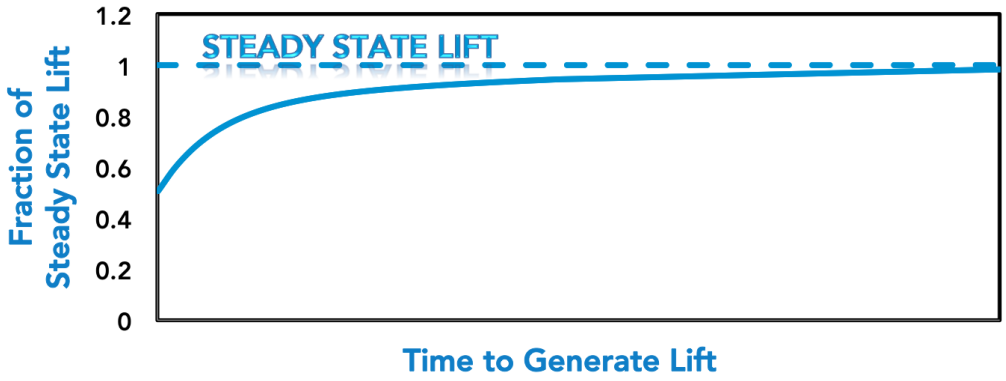

The result of this time delay between the wave-induced rolling motion, and the generation of lift to create an opposing stabilizing torque is the introduction of accelerations in the roll axis. This is the jerkiness that you can feel. On some fin installations this effect can be more annoying than others, but in all cases it is unnecessary and only serves to make the vessel less comfortable than if it were not present.

Chapter Four :
How Gyros Create a Higher Quality of Comfort

Fin Jerkiness At Rest

In the late 1990's an innovation in fin stabilizer technology resulted in fin stabilizers that for the first time, could offer some stabilization when the vessel was at zero speed. Unfortunately the technical changes required to make the zero speed stabilization work also resulted in significantly more drag and less efficient lift generation when underway, and introduced unpleasant jerkiness at rest. In brief, these zero speed fins were of much lower aspect ratio than the traditional fins, had a larger area, and had the shaft line positioned well towards the leading edge rather than at the centre of lift of the foil.

Zero Speed Fin Plan

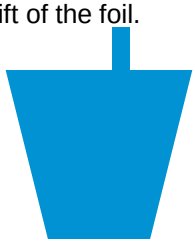

Conventional Fin Plan

The control of these fins when operating at zero speed is very different from when they are operating as traditional stabilizer fins underway. Basically the control system positions the fins at a high angle of rotation and waits for the vessel to change rolling direction. When the vessel changes rolling direction, the fins are actuated through a much larger than usual angular range. The initial acceleration up to actuation speed accelerates the mass of water attached to the fin (this is accentuated by the shaft location forward, the low aspect ratio, and the higher than usual fin area). The force generated by this acceleration does a large portion of the effective stabilization work. After the initial acceleration, the fin rotates at constant velocity and the drag of the aft part of the fin sweeping through the water provides additional stabilizing effect. At the end of the actuation range, the fin must be decelerated to a stop. During this phase, the force generated by the fin actually assists the vessel roll. However the force is relatively low at this time.

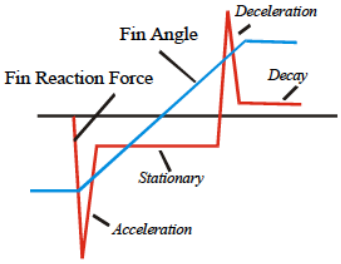

Although the changes described above did create a fin that in its time was revolutionary and provided a zero speed stabilization solution, there are significant disadvantages to these fins. Significantly higher fin drag and less efficient lift genration is caused by the less efficient lower aspect ratio, the increased fin area, and the longer base chord leading to larger drag causing hull/fin gaps when actuated. Dr. Dallinga at MARIN concluded that " if comfort in transit conditions is an issue, fins with a high aspect ratio (the previous traditional fin design) …are a much more efficient way to stabilize the vessel." Echoing the costs associated with adding a zero speed capability to fin stabilizers.

The other serious disadvantage of these fins is jerkiness. The fact that they rely on accelerating the mass of water surrounding the fin in order to function, inherently creates accelerations that are not synchronised to the vessel rolling motion. This jerkiness is unnecessary and unpleasant.

Chapter Four :
How Gyros Create a Higher Quality of Comfort

A Higher Quality of Comfort with Gyro Stabilization

Because a gyro's roll stabilizing torque is created by the rolling motion itself, there is absolutely no time delay, or lag, between the wave induced rolling motion and the stabilizing torque produced by a natural precession gyrostabilizer.

The result is an amazingly smooth application of the massive stabilizing torques produced. In practice, the experience of turning the gyro ON is fundamentally different from fin stabilizers. There is simply a calm, relaxing reduction of rolling motion.

This sensation has to be experienced to be understood. For too long, the yachting community has believed that the trade off for a reduction in rolling motion was an unpleasant jerkiness. This no longer is the case.

> There is simply a calm, relaxing reduction in rolling motion.

CHAPTER FIVE

How Gyros Compare to Fins

VEEM Gyro

So, what are the main differences between fins and gyros? This chapter discusses some of them.

Gyros are Safe for Swimmers – Many Captains will not run zero speed fins when guests are swimming in the vicinity of the yacht for safety reasons. This understandable and responsible, however this compromise between the comfort of those onboard, and swimmers is not required with a gyro installation as there are no appendages in the water.

Reduced Drag, Higher Hull Efficiency – On most yacht installations, selecting a gyro over zero speed fins will result in Higher Speed, Increased Range, and Fuel Savings. The trade off is between the increase in mass between a fin installation and a gyro. The increased mass does represent a hull drag cost, however when compared to the drag of inefficient low aspect ratio zero speed fins (especially if they are actually working), a significant net reduction in drag is achieved.

No Risk of Grounding Damage – We have all experienced or heard stories of stabilizing fins being damaged by collision with floating debris, or grounding. This usually results in time consuming and expensive dry-docking for repair of replacement. This is simply not possible with a gyrostabilizer located inside the hull.

No Fouling with Nets or Cables – The risk of fouling fishing nets, long lines, buoy anchors, or cables is removed completely with a gyrostabilizer located inside the hull.

No Equipment Outside of the Engine Room – By locating the gyrostabilizer(s) in the engine room, noise levels are reduced as compared to fins (most important at night), and there is no requirement for technical personnel to enter the owners spaces for operational or maintenance tasks related to fins.

No Jerkiness = Higher Quality of Comfort – This has been discuss in detail in Chapter Five.

Chapter Five :
How Gyros Compare to Fins

No Dry-Docking for Maintenance, Ever – Dry-docking is a hectic and crammed period, with many systems requiring attention. A VEEM Gyro can be fully maintained (including major over-haul) within the vessel. So take a few lines off the docking list by selecting a gyro over fins.

Simple Installation – No Need to Run Cables and Piping Through Frame Penetrations – Enough said. Having the gyro delivered as a fully self-contained item of equipment saves a vast amount of time, effort and money coordinating frame penetrations, cable runs and piping runs through the hull.

Gyros Alone Cannot Control Steady List, so Install with Transom Flaps or Interceptors – One characteristic of a gyrostabilizer is that it cannot sustain a stabilizing torque for an extended time (they are great at opposing motion, but when the motion stops, they stops creating torque). This means that steady list angles due to wind heel or induced during turning maneuvers, cannot be corrected by a gyro acting alone. Fortunately there is a highly efficient solution to this.

In order to optimise trim (to maximise fuel efficiency, and speed) and to manage list angles, it is recommended that the gyro be installed with either transom flaps or interceptors. By doing so, you get all of the comfort and low drag benefits of the gyro (including no ugly appendages prone to damage and fouling), as well as steady state trim and list control. Both trim flaps and interceptors are extremely efficient at controlling steady state running trim and list. Both solutions also maintain clean hull lines free of appendages and their costs.

VEEM can provide integrated control of the gyro(s) and an auto trim/list system. This system provides both auto trim and auto trim management. By allowing the gyro(s) to do the dynamic stabilization work, the transom flaps or interceptors power supply can be compact and efficient.

When two pairs of fins are installed on a vessel, they can be used to correct trim and list. However this detracts from the force available to roll control and is relatively inefficient from a drag perspective.

Chapter Five :
How Gyros Compare to Fins

CHAPTER SIX

Busting Gyro Myths

As a relatively new product, there remain several myths about the behavior of gyrostabilizers. This chapter attempts to clarify some of these.

Gyro Myth 1 - Angular momentum alone defines the stabilizing performance of a gyro stabilizer

In fact, just as important is the way in which precession motion is controlled. The major considerations that define the performance of a gyro stabilizer are: flywheel angular momentum, the precession range allowed, the maximum precession rate allowed, and the ability of the gyro stabilizer to maintain full precession range when vessel rolling rates are low. All of these considerations are handled differently by the various vendors of gyro stabilizers. Understanding exactly how each unit works will allow the most informed selection of the best gyro system for your application. A good place to start is to find out exactly how much stabilizing torque is generated across a range of rolling periods. This will unearth many of the considerations discussed above. It is also very important to understand what the operational envelope of the gyro stabilizer is. Will the unit continue to operate in rough conditions when you need it most? In what conditions (if any) will the unit shut down or de-rate to protect itself?

Gyro Myth 2 - Actively driving the precession faster than proportional to rolling motion produces more stabilization torque

This is theoretically possible, but not a practical reality. The resulting uncomfortable harmonics introduced into the rolling motions of the yacht would create a significantly less comfortable experience for those on-board. Given that there is a finite range of precession available before the stabilization torque starts to increase rolling motion, if you accelerate precession motion through some of that range then you need to decelerate this motion somewhere else in the cycle. These accelerations can be felt by guests as ‘wobbles’ in the rolling motion that are hard for a human to predict and therefore make walking and general balance more difficult. So while it theoretically possible to do this, it is not a practical solution. *If it sounds too good to be true…then it probably is.*

Gyro Myth 3 - Without the precession braking, no roll stabilizing torque is produced

In fact in very small waves where the gyro is not overpowered, a vertical axis gyro could work without any control system whatsoever. A horizontal axis gyro would also work a little, but the very high resistance to precession of the slew ring bearings used on these systems would significantly limit the stabilizing torque generated. Stabilization torque is not caused by the precession axis braking torque, it is caused by the precession oscillation rate combining with the angular momentum of the flywheel to generate torque in the roll axis. The precession braking is only applied to manage the precession motion to within a nominated precession oscillation range and in most cases also to limit the rate of precession oscillation so that the gyro torque created is effectively capped allowing the supporting structure to be designed to withstand a defined maximum level of load.

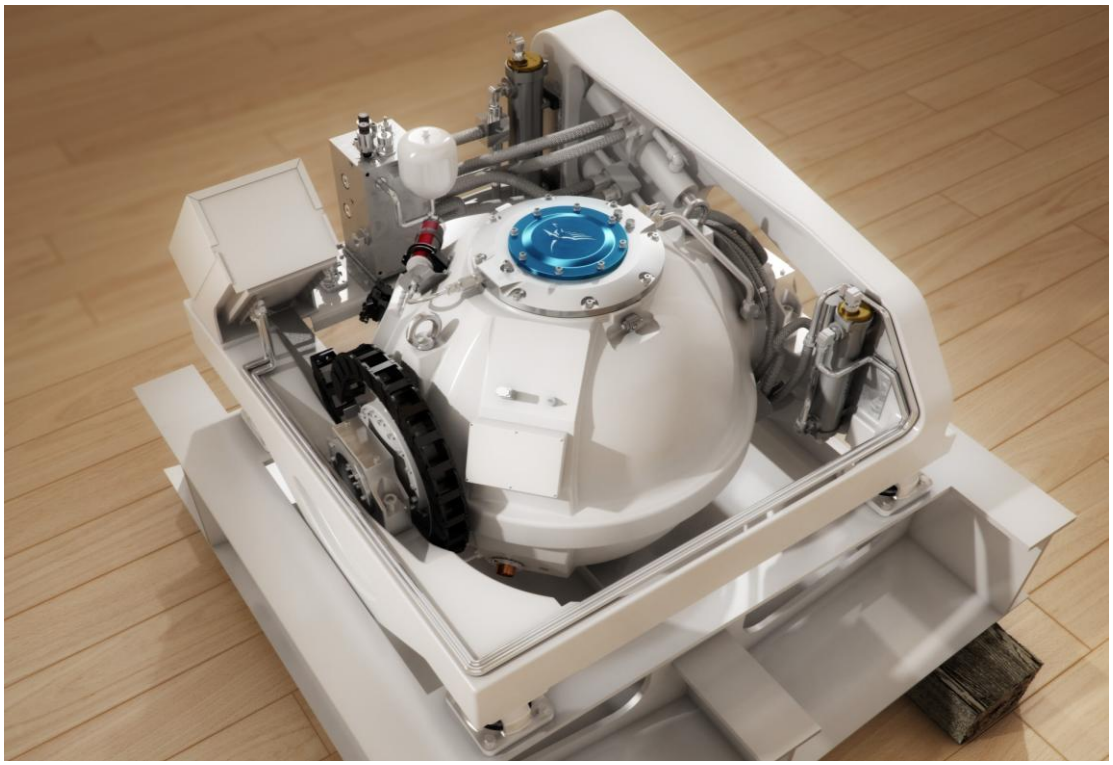

Gyro Myth 4 – Gyros Must be Located On Vessel Centreline

Because a gyrostabilizer produces a pure torque, it can theoretically be located anywhere on the vessel. The stabilizing torque will always neatly oppose the rolling torque whether on or off vessel centre-line, or whether forward or aft.

To avoid high vertical accelerations that might shorten the life of the bearings, VEEM recommends that the unit(s) are located aft of mid-ships. However when required it is possible to locate them up to 70% of LWL forward of the transom.

So long as the overall mass distribution of the vessel is maintained, there is absolutely no performance disadvantage to locating the gyro(s) off center-line.

If the gyro(s) are located more than 2m above the waterline, please discuss this with VEEM. The flexible rubber isolation mounts may need to be transversely supported to prevent over-load.

In most cases, the convenience of electrical power supply and suitably strong supporting structure will result in the gyro being located within the engine room. This has the added advantage of enclosing the gyro within a noise lagged space. Where the gyro(s) are located outside of the engine room, noise isolation considerations should be addressed.

Gyrostabilizers can be conveniently located as far from the owner's spaces as practical. This helps to eliminate annoying night-time noise, and to ensure that service technicians do not need access to the owners spaces.

So in summary, the gyro can be located:

- Up to 70% LWL forward of the transom
- Off centre-line
- Up to 2m above waterline

Gyro Myth 5 - A spinning flywheel will provide stabilization even it it is NOT free to precess

In fact, a pre-1900 gyro stabilizer invention claimed to work without precession. This was eventually debunked and the invention discredited. The stabilizing torque is created by the combination of the flywheel's angular momentum and the precession oscillation rate. If the flywheel does not precess, no stabilization torque is generated. This is how a gyro stabilizer can be turned OFF without stopping the flywheel from spinning. The precession oscillation axis is simply locked.

Gyro Myth 6 – A spinning flywheel inherently wants to remain in its current position.

In fact a spinning flywheel does not have any inherent stability, or tendency to remain at its current orientation. As we have discussed above, a flywheel does have very specific gyro-dynamics that cause it to bend and applied torque through 90 degrees as a rate of precession, or to bend a rotational motion through 90 degrees as a torque. However there are many specific flywheel applications where the flywheel does provide a stabilizing influence. These include the spinning top children's toy, the front wheel of motorcycle or bicycle, and happily, a marine gyro stabilizer. However each of these applications applies gyro-dynamics in a unique way, and is not related to any inherent stability of a flywheel, but the way that it bends torque through 90 degrees.

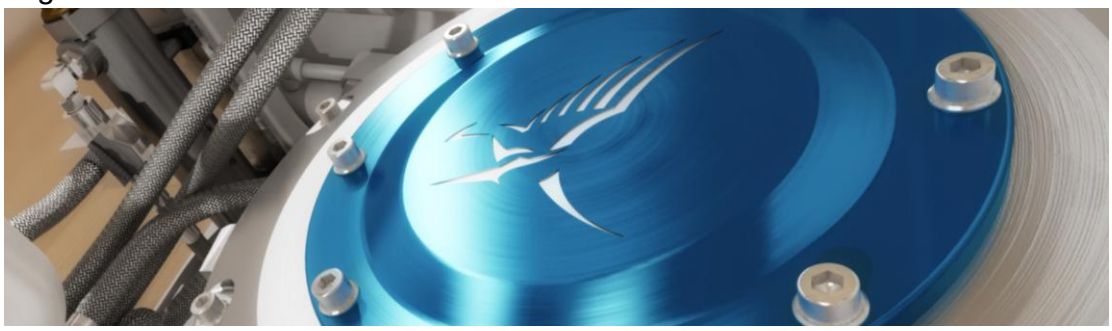

CONCLUSION

Gyro Stabilization has transformed expectations of comfort and safety in waves, at rest and underway.

With the release of the powerful VEEM Gyro range, real solutions for large yachts and commercial vessels are available for the first time.

VEEM Gyro

NEXT STEPS

To discover the VEEM Gyro options suited to your project, use VEEM's online GyroSize calculator. You will be emailed a comprehensive PDF report in minutes.

Use GyroSize

VEEM Gyro

Less Motion, More Ocean